SERVICE MANUAL

Stereo Integrated Amplifier

LV-117

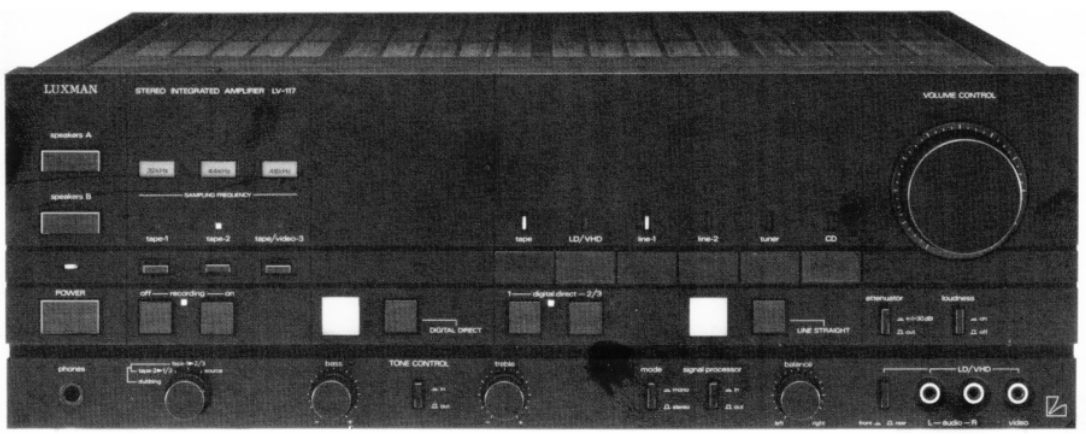

Contents

Specifications ····· 3
Parts Locations and Disassembly Instructions ····· 4 to 5
Adjustment Procedures ····· 5 to 6
Adjustment Locations ····· 7 to 8
Block Diagram ····· 8
Parts Layout on P. C. Boards and Wiring Diagram (UQ and UZ model only 1/3) ····· 9 to 11
Parts Layout on P. C. Boards and Wiring Diagram (UQ and UZ model only 2/3) ····· 12 to 14
Parts Layout on P. C. Boards and Wiring Diagram (UQ and UZ model only 3/3) ····· 15 to 17
Parts Layout on P. C. Boards and Wiring Diagram (AD and JA model only 1/3) ····· 18 to 20
Parts Layout on P. C. Boards and Wiring Diagram (AD and JA model only 2/3) ····· 21 to 23
Parts Layout on P. C. Boards and Wiring Diagram (AD and JA model only 3/3) ····· 24 to 26
Schematic Diagram (1/2) ····· 27 to 29
Schematic Diagram (2/2) ····· 30 to 32
Electrical Parts List ····· 33 to 43
Packing Assembly Parts List ····· 44
Packing Method View ····· 44
Cabinet Assembly Parts List ····· 45 to 46
Exploded View (Cabinet) ····· 47 to 48
Semi-Conductor Lead Identifications ····· 49 to 55

Specifications

Power Output ····· 110W/ch (8 ohms 20Hz~20kHz)
Total Harmonic Distortion ····· 0.05% (20Hz~20kHz at 110W into 8 ohm)
Input Sensitivity (at 1kHz) ····· CD : 150mV±10%
Tuner : 150mV±10%
Line-1, 2 : 150mV±10%
LD : 150mV±10%
VHD : 150mV±10%
Tape-1~3 : 150mV±10%
Input Impedance (at 1kHz) ····· CD : 47k ohm±10%
Tuner : 47k ohm±10%
Line-1, 2 : 47k ohm±10%
LD : 47k ohm±10%
VHD : 47k ohm±10%
Tape-1~3 : 30k ohm±10%
Frequency Response (10Hz~100kHz) ····· CD : ±1.5dB
Tuner : ±1.5dB
Line-1, 2 : ±1.5dB
LD : ±1.5dB
VHD : ±1.5dB
Tape-1~3 : ±1.5dB
Tone Controls ····· Bass (100Hz) : ±9±2dB
Treble (10kHz) : ±6±2dB (JA and AD Model only)
±6+4, −2dB (UZ and UQ Model only)
Loudness Control (VR-30dB) ····· 10Hz : +6+5, −2dB
10kHz : +4+5, −2dB
S/N Ratio (Input Short-Circuit) ····· CD : 85.9dB
Tuner : 85.9dB
Line-1, 2 : 85.9dB
LD : 85.9dB
VHD : 85.9dB
Tape-1~3 : 85.9dB
Cross Talk (at 1kHz) ····· CD : 60dB
Tuner : 60dB
Line-1, 2 : 60dB
LD : 60dB
VHD (SP Out) : 60dB
Head-phone Output ····· (110W/8 ohm-1kHz) 400mV±10%
Power Supply ····· 100V, 50/60Hz (JA Model only)
120/220/240V, 50Hz (AD Model only)
120V, 60Hz (UZ and UQ Model only)
Semiconductors ····· 24 IC's, 59 Transistors, 12 FETs,32 Diodes, 16 Zener Diodes (JA Model only)
24 IC's, 59 Transistors, 12 FETs,28 Diodes, 18 Zener Diodes (AD Model only)
25 IC's, 60 Transistors, 12 FETs,34 Diodes, 18 Zener Diodes (UQ Model only)
25 IC's, 64 Transistors, 12 FETs,38 Diodes, 18 Zener Diodes (UZ Model only)
Dimensions ····· 438 (W) ×166 (H) ×422 (D) mm
Weight ····· 15.7kg

Digital/Analog Section

Output Level (at 1kHz) ····· 2V±10%
Frequency Response (20Hz~20kHz) ····· ±1dB
S/N Ratio ····· 90dB
Cross Talk (at 1kHz) ····· 75dB
Total Harmonic Distortion (at 1kHz) ····· 0.01%
Dynamic Range (at 1kHz) ····· 70dB

NOTE : Due to continuing product improvement, specifications and design are subject to change without notice.

Parts Locations and Disassembly Instructions

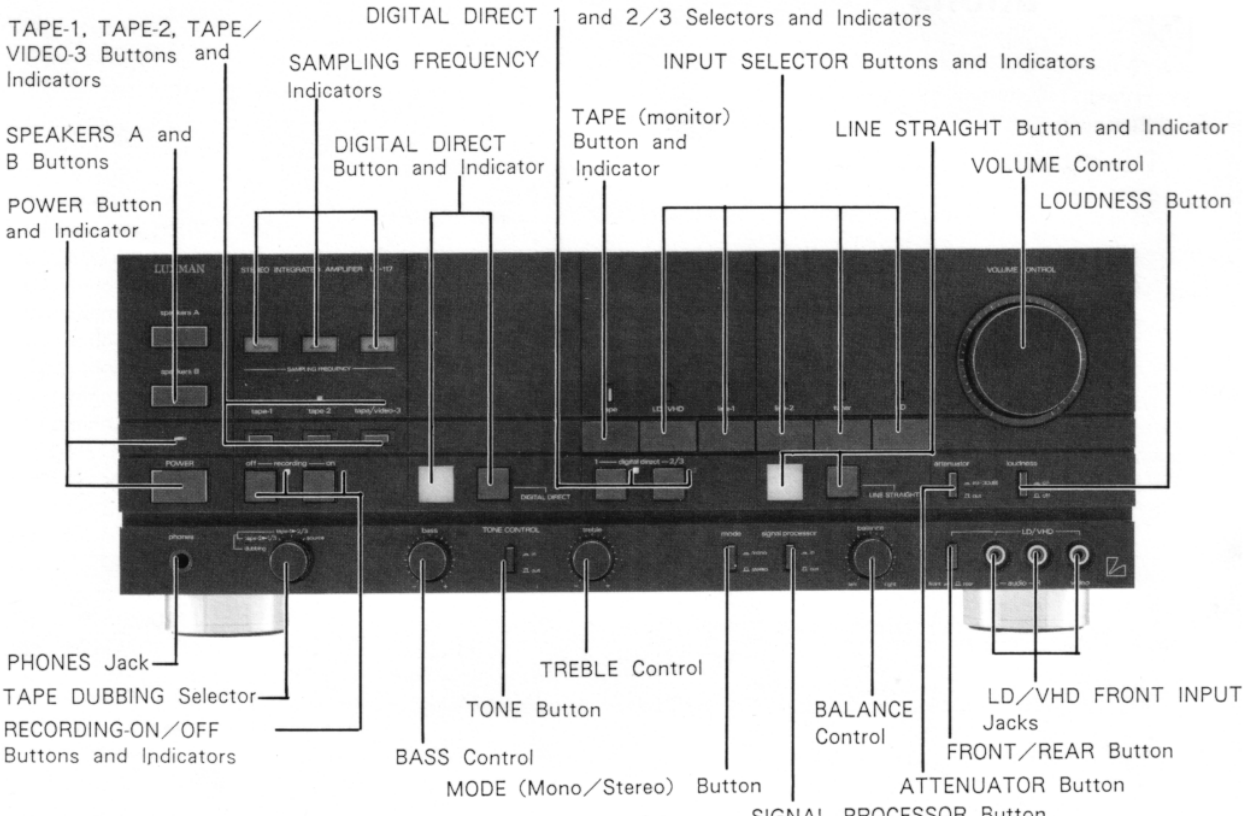

Figure 1

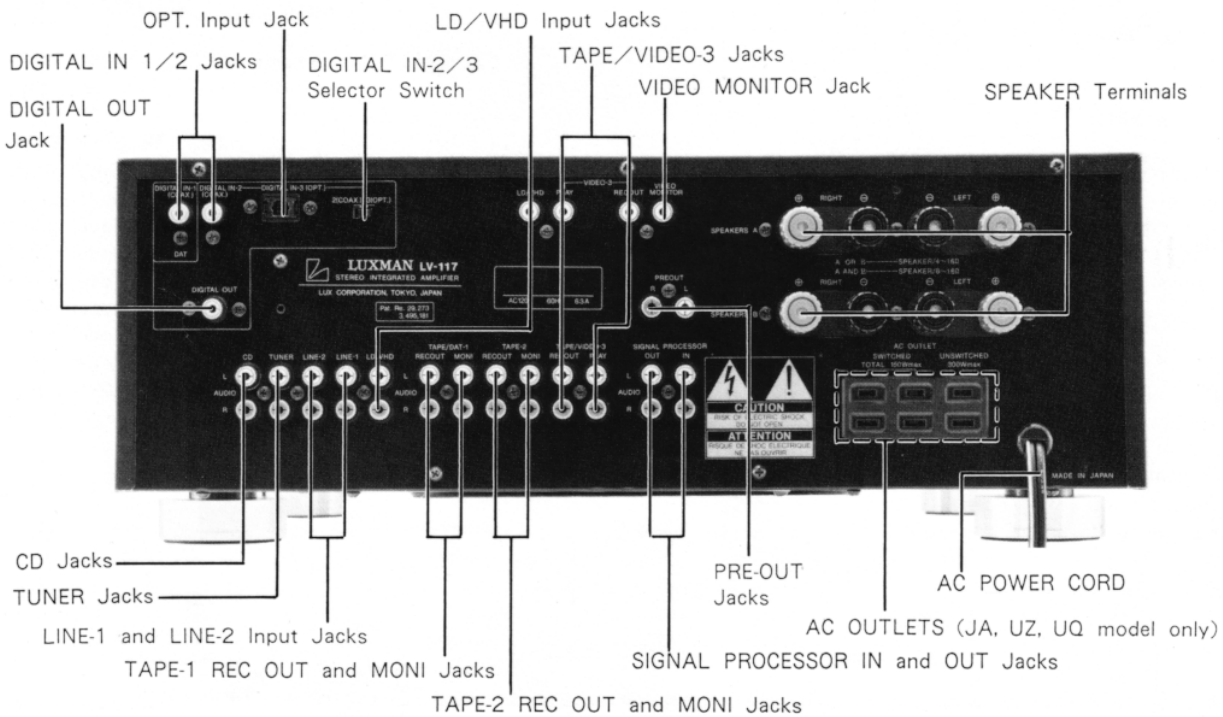

Figure 2

1. Removal of Main P. C. Board

(1) After removal of the top cover, remove five screws marked "○" as shown in Figure 3.
(2) After removal of the bottom cover and chassis channel, remove three screws marked "△" and solders (A) as shown in Figure 4.
(3) Disconnect all wires from the Main P. C. Board and the P. C. Board with heatsink can be removed completely.

1. メイン基板の外し方

(1) 上蓋を外してから5本のネジ（○印）を外します。（3図参照）
(2) 底蓋とシャーシ・チャンネルを外してから3本のネジ（△印）と半田（A）を外します。（4図参照）
(3) メイン基板から出ている全てのリード線を外せば、基板はヒート・シンクと一緒に外せます。

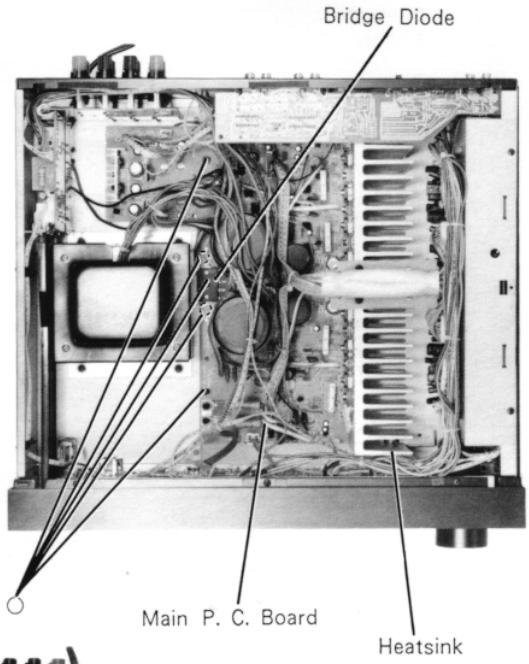

Figure 3

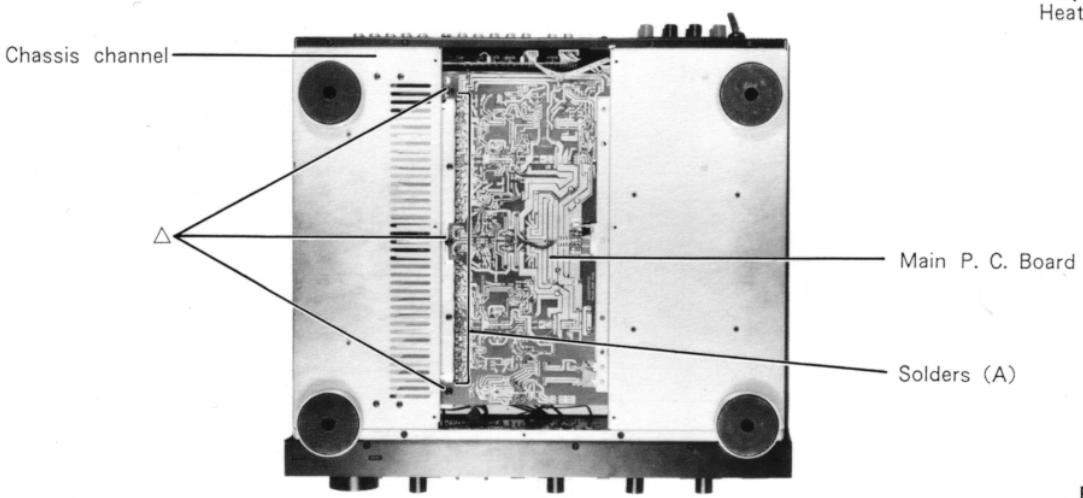

Figure 4

Adjustment Procedures

1. Connections

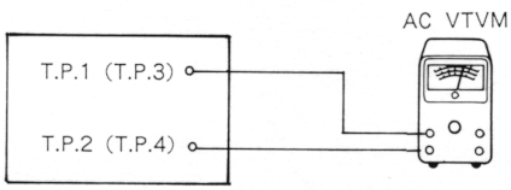

Figure 5

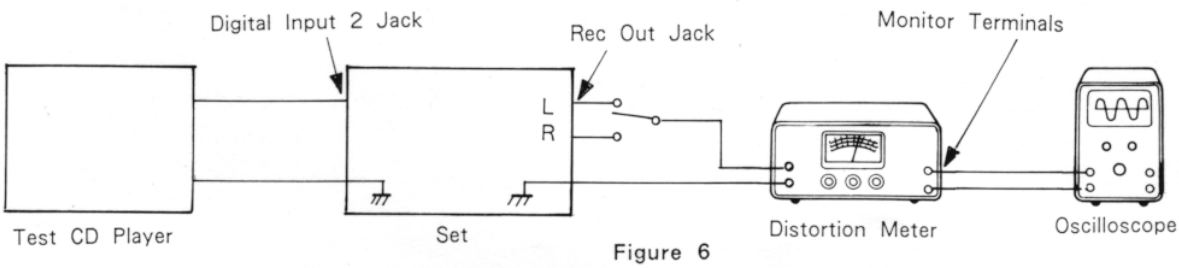

Figure 6

2. Control Settings

Power Switch ·····ON
Speaker Switch ····· A Position
Others ·····OFF
Digital In 2/3 Selector Switch ····· 2 (COAX)
Volume Control ·····Minimum
Treble/Bass/Balance Control ····· Center

3. Adjustment Procedures

(1) Idling Adjustment (Figure 5, Connections)

1. Set VR7501 (VR7502) to minimum.
2. Adjust VR7501 (VR7502) so that voltage between T.P.1 (T.P.3) and T.P.2 (T.P.4) reaches 10±3mV.

Note : Proceed the adjustment shown above about a minute after power is turned on.

(2) DAC Distortion Adjustment (Figure 6, Connections)

1. Set the digital direct switch to the ON position.
2. Apply 1kHz, 2V input signal.
3. Adjust VR2101 so that distortion is minimum.

調整箇所

1. 接続

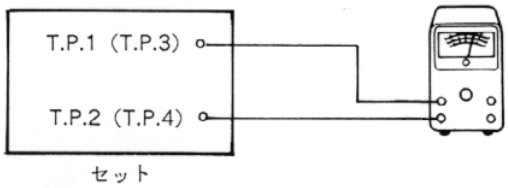

<5図>

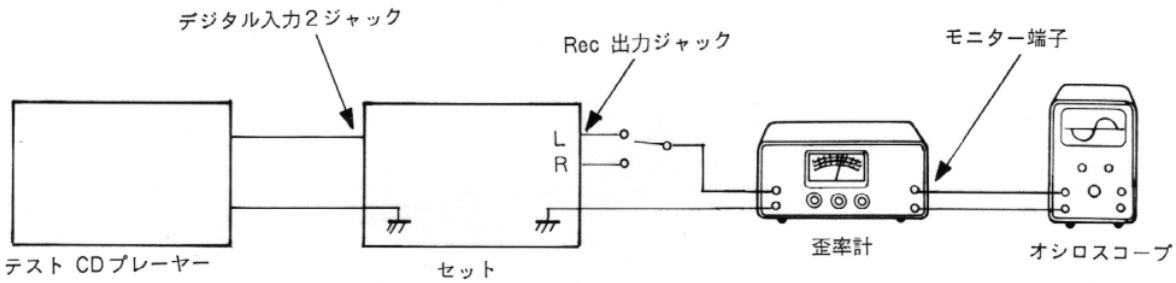

<6図>

2. コントロール類のセット位置

電源スイッチ ·····ON
スピーカー・スイッチ ·····A位置
他のスイッチ類 ·····OFF
デジタル入力 2/3セレクター・スイッチ ···2 (COAX)
ボリューム調整ツマミ ·····最小
トレブル/バス/バランス調整ツマミ ·····中央

3. 調整方法

(1) アイドリング調整 (接続、5図)

1. VR7501 (VR7502) を最小にセットします。
2. T.P.1 (T.P.3)、T.P.2 (T.P.4) 間の電圧が10±3mVになるようにVR7501 (VR7502) で調整します。

注意：電源ON後約1分ぐらいたってから上記の調整を行います。

(2) DAC歪率調整 (接続、6図)

1. デジタル・ダイレクトスイッチをON側にします。
2. 1kHz、2Vの入力信号を加えます。
3. 歪率が最小になるようにVR2101で調整します。

Adjustment Locations

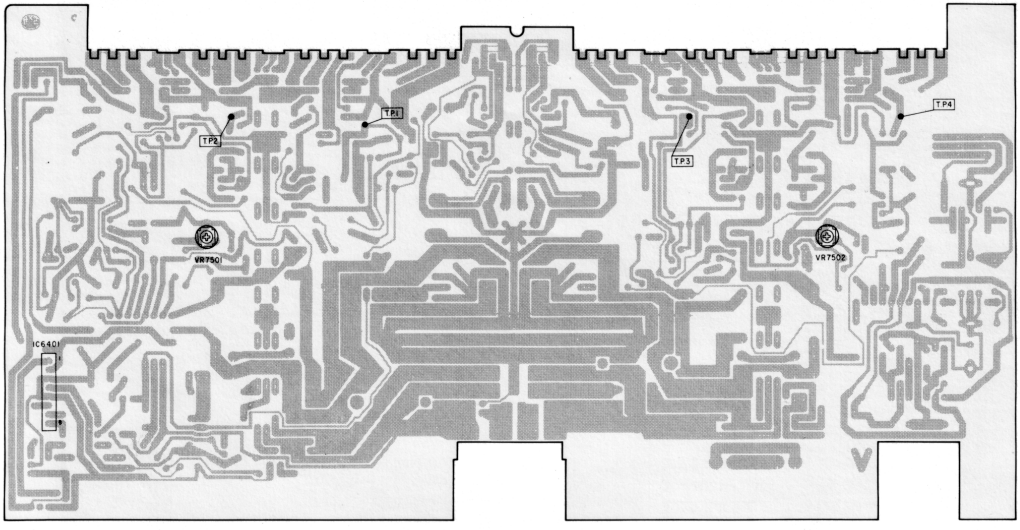

Main P. C. Board (UQ and UZ model only)

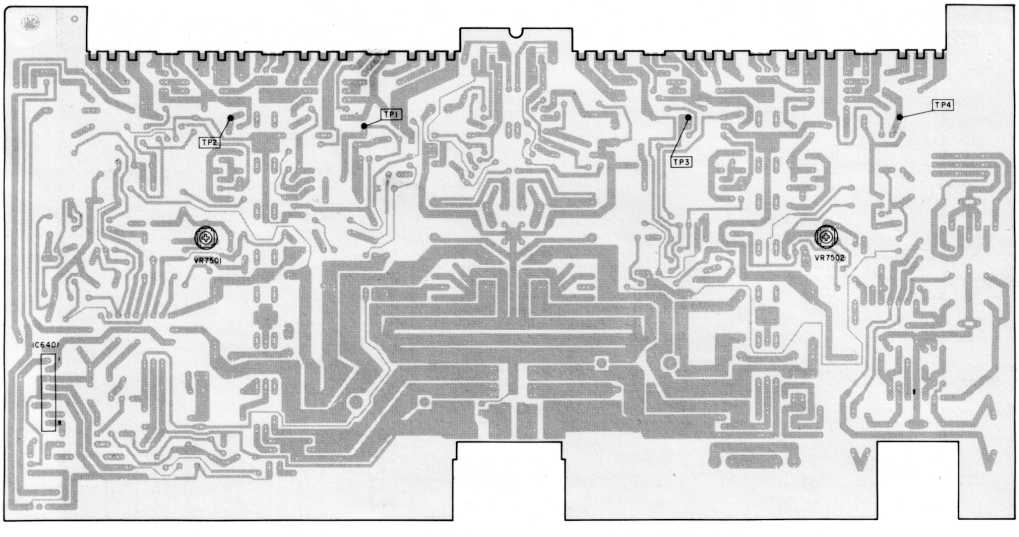

Main P. C. Board (AD and JA model only)

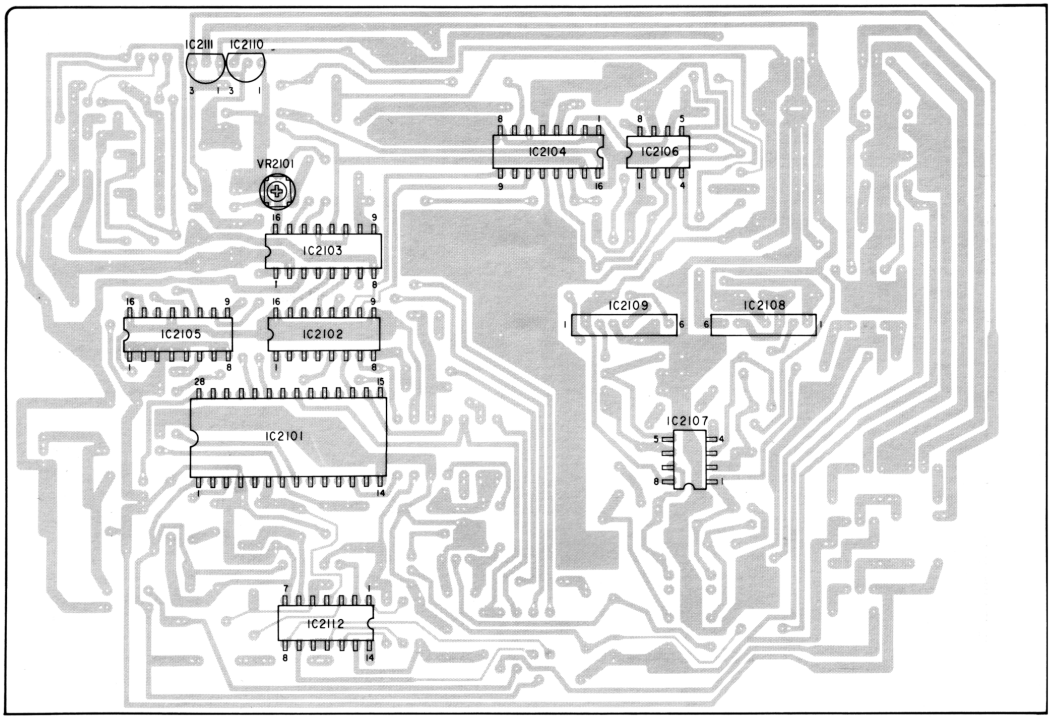

DAC P. C. Board

Block Diagram

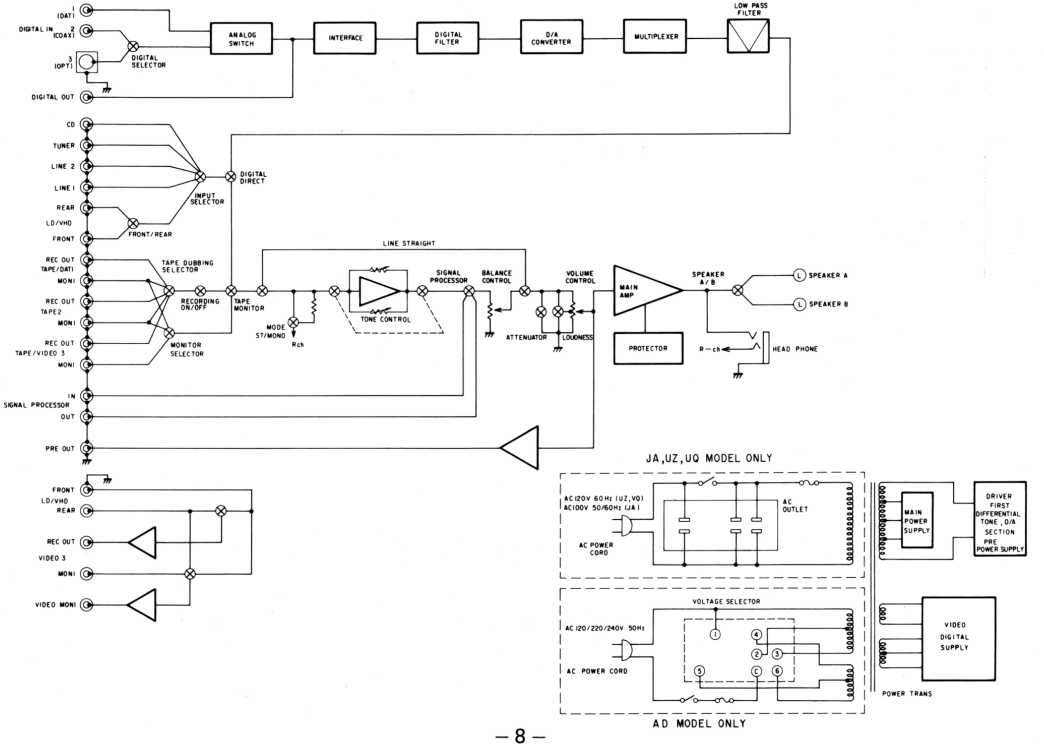

Parts Layout on P.C. Boards and Wiring Diagram (UQ and UZ model only 1/3)

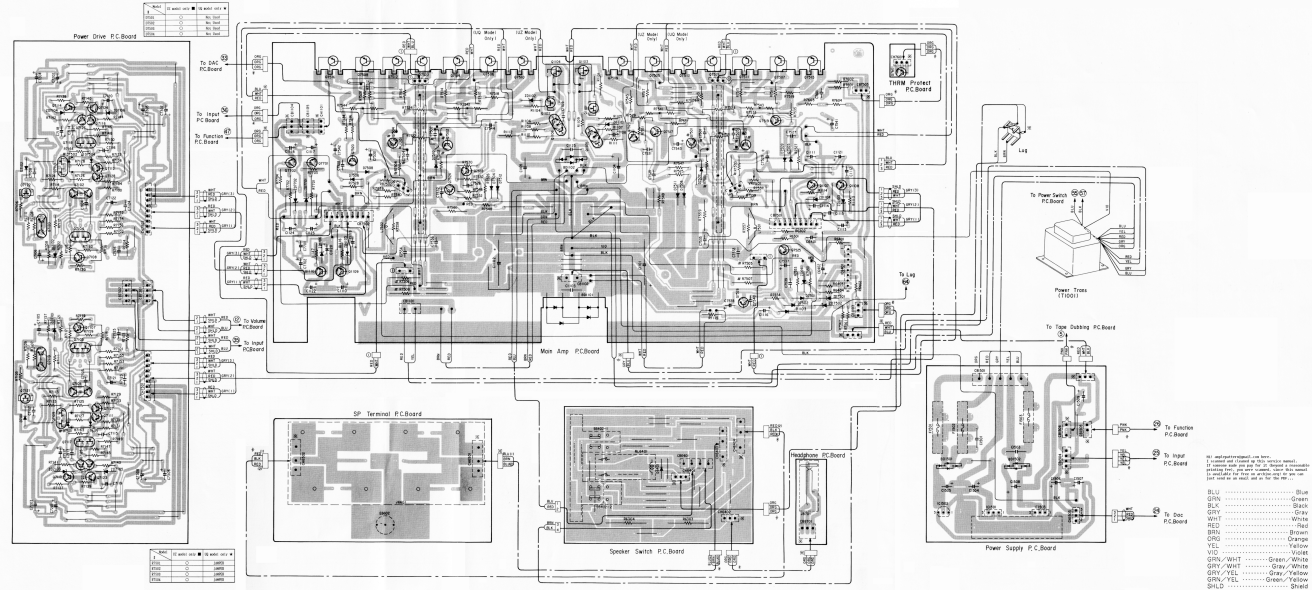

Model	UQ model only	UZ model only
1		
2		
3		
4		
5		
6		
7		
8		
9		
10		
11		

Model	UQ model only	UZ model only
1		
2		
3		
4		
5		
6		
7		
8		
9		
10		
11		

All amplifiers(Model) are here.
I cannot end (Cancel up this service manual).
If someone made you pay for 20 Shipped a reasonable printing fee, you may cancel, where this manual is available for free on service only for you can just send to us email and to for the FEE...

BLU	Blue
GRN	Green
BLK	Black
GRY	Gray
WHT	White
RED	Red
BRN	Brown
ORG	Orange
YEL	Yellow
VIO	Violet
GRN/WHT	Green/White
GRY/WHT	Gray/White
GRY/YEL	Gray/Yellow
GRN/YEL	Green/Yellow
SHLD	Shield

Parts Layout on P.C. Boards and Wiring Diagram (UQ and UZ model only)

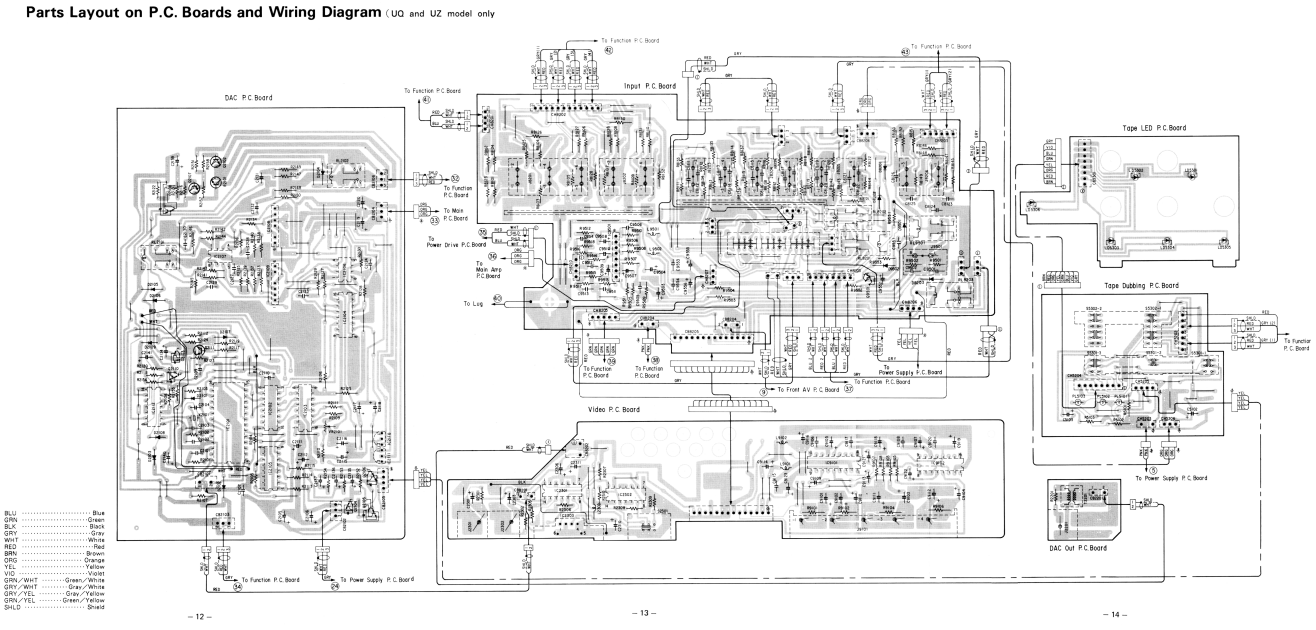

Parts Layout on P.C. Boards and Wiring Diagram (UQ and UZ model only 3/3)

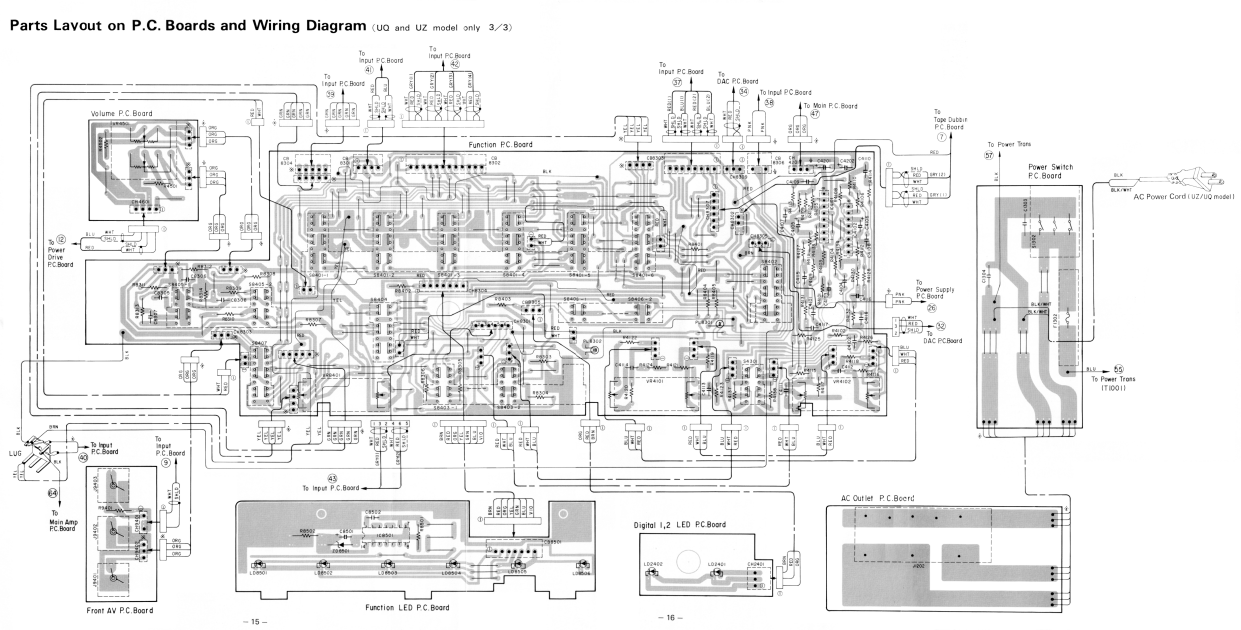

Parts Layout on P.C. Boards and Wiring Diagram (AD and JA model only 1/3)

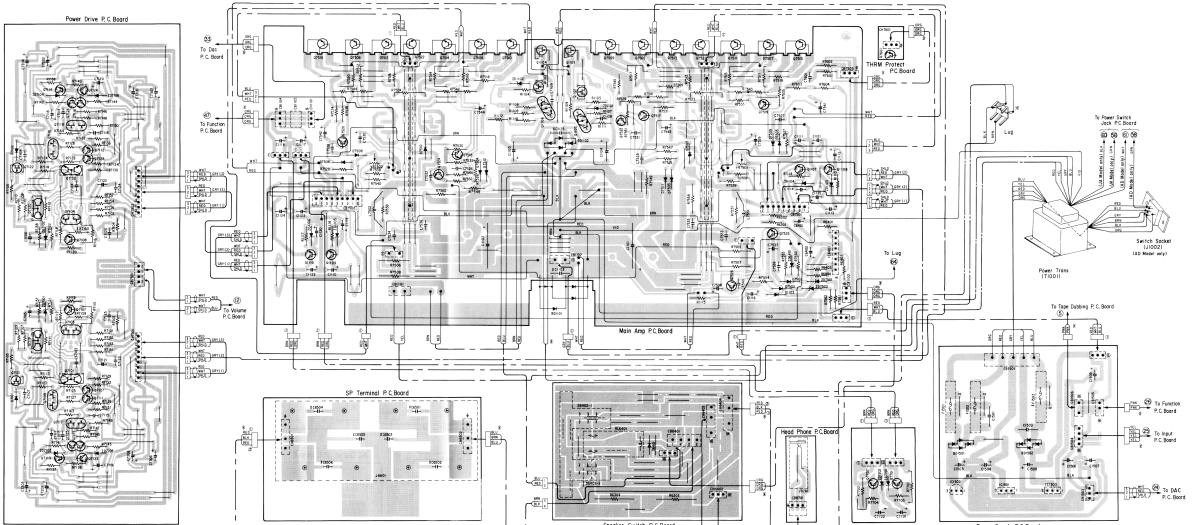

BLU	Blue
GRN	Green
BLK	Black
GRY	Gray
WHT	White
RED	Red
BRN	Brown
ORG	Orange
YEL	Yellow
VIO	Violet
GRN/WHT	Green/White
GRY/WHT	Gray/White
GRY/YEL	Gray/Yellow
GRN/YEL	Green/Yellow
SHLD	Shield

Mark	(D model only) ▲	(A model only) ●
2100	Not Used	○
2100	Not Used	○
2101	○	Not Used
2102	○	Not Used
2103	○	Not Used
2104	○	Not Used
2105	○	Not Used
2106	○	Not Used

Mark	(D model only) ▲	(A model only) ●
2100	Not Used	○
2101	Not Used	○
2102	○	Not Used
2103	○	Not Used
2104	○	Not Used
2105	○	Not Used
2106	○	Not Used

Parts Layout on P.C. Boards and Wiring Diagram (AD and JA model only 2/3)

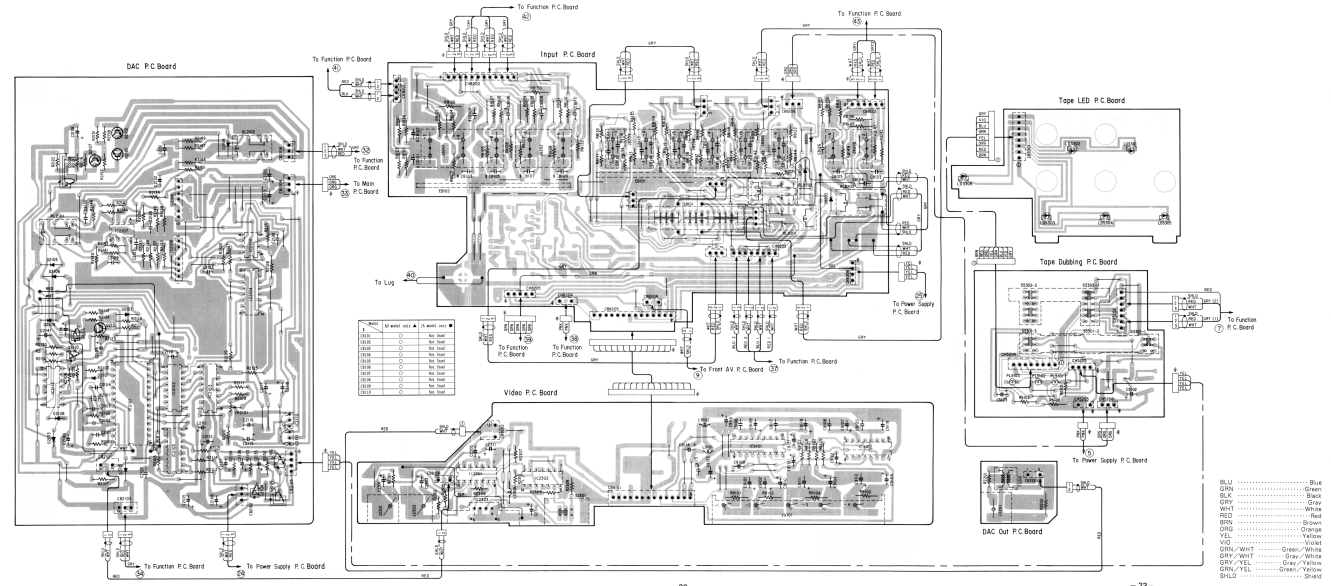

Parts Layout on P.C. Boards and Wiring Diagram (AD and JA model only 3/3)

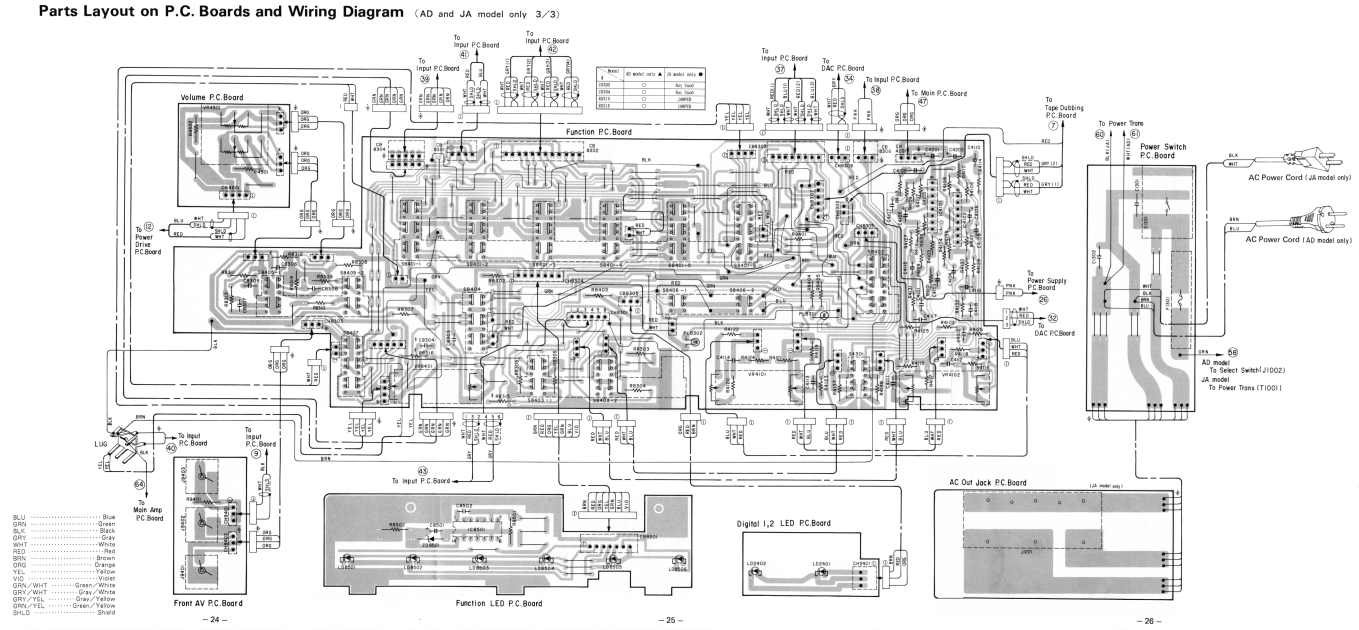

Schematic Diagram (1/2)

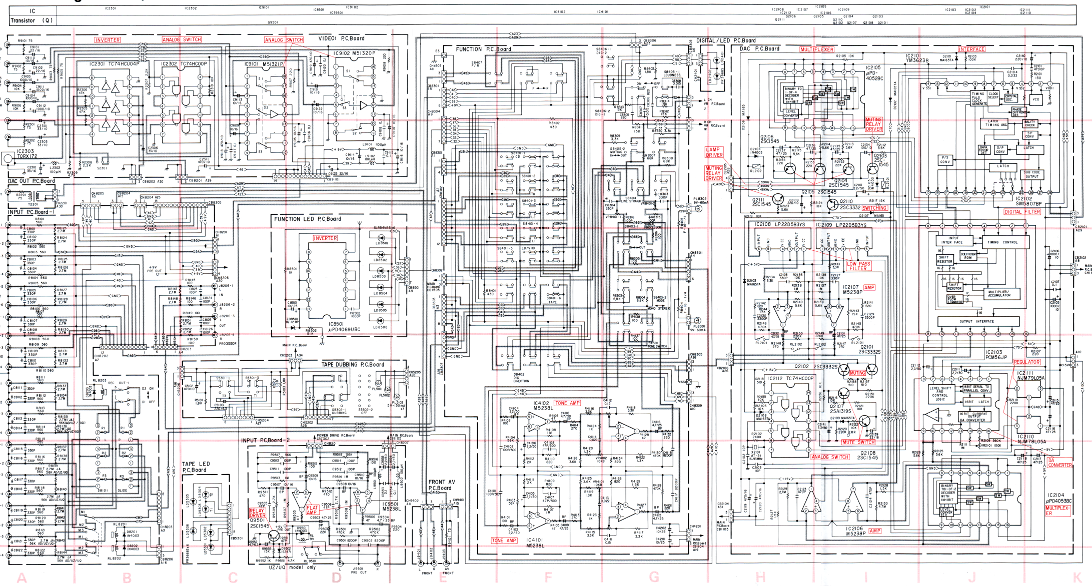

	E	C	B
Q2110	0V	0.6V	0.6V
Q2111	0V		0.6V
Q2106	0V		0.6V
Q2105	0V		0.6V
Q2104	0V		0.6V
Q2103	0V		0.6V
Q2102	0V	0V	0.6V
Q2101	0V	0V	0.6V
Q2107	15V	0.6V	14.4V
Q2108	0V	0.6V	0.6V
Q9501	0V	0.6V	0.6V

IC2107

1	0V
2	0V
3	0V
4	-15V
5	0V
6	0V
7	0V
8	-15V

IC2101

1	5V	15	5V
2		16	0V
3	5V	17	0V
4	0V	18	
5		19	
6	5V	20	
7	0.6V	21	5V
8	5V	22	5V
9		23	5V
10		24	5V
11		25	
12	0V	26	
13		27	
14	0V	28	5V

IC2102

1	5V
2	
3	5V
4	
5	5V
6	0V
7	2.8V
8	0V
9	5V
10	0V
11	0V
12	0V
13	0V
14	
15	0V
16	5V

IC2104

1	0V
2	0V
3	0V
4	0V
5	0V
6	0V
7	-5V
8	0V
9	0V
10	
11	0V
12	0V
13	0V
14	0V
15	0V
16	5V

IC2105

1	0V
2	0V
3	0V
4	0V
5	0V
6	5V
7	0V
8	0V
9	5V
10	5V
11	0V
12	0V
13	5V
14	
15	
16	5V

IC2106

1	0V
2	0V
3	0V
4	
5	0V
6	0V
7	0V
8	

IC2103

1	-5V
2	0V
3	8V
4	
5	0V
6	0V
7	5V
8	-5V
9	-0.7V
10	-0.7V
11	0V
12	0V
13	0V
14	
15	2.5V
16	5V

IC2301

1	5V
2	0V
3	5V
4	0V
5	5V
6	0V
7	0V
8	4.8V
9	0V
10	
11	2.5V
12	2.5V
13	2.5V
14	5V

IC2302

1	2.5V
2	5V
3	5V
4	5V
5	5V
6	5V
7	
8	5V
9	
10	5V
11	5V
12	5V
13	5V
14	5V

IC2112

1	4.5V
2	5V
3	0V
4	0V
5	5V
6	5V
7	
8	5V
9	5V
10	0V
11	
12	
13	

IC9501

1	0V
2	
3	0V
4	
5	0V
6	
7	
8	0V

IC4102

1	0V
2	0V
3	0V
4	
5	0V
6	0V
7	0V
8	

IC9101

1	2.6V	10	
2	0V	11	
3	3.4V	12	
4	0V	13	4V
5	3.4V	14	4V
6	0V	15	0V
7	3.3V	16	
8	0V	17	
9		18	

IC8501

1	1.1V
2	1V
3	1.1V
4	1V
5	1.1V
6	1.1V
7	1V
8	1.1V
9	1V
10	1V
11	1V
12	1V
13	1.1V
14	1.1V

IC4101

1	0V
2	0V
3	0V
4	
5	0V
6	0V
7	0V
8	

IC9102

1		9	
2	9V	10	
3	3.3V	11	4V
4	0V	12	4V
5	3.4V	13	0V
6	0V	14	3.3V
7	0V	15	3.3V
8		16	3.3V

Model	JA model only(●)	UZ model only(■)	UQ model only(★)	AD mode only(▲)
IC9501	X	M5238L	M5238L	X
C9503	X	4.7μF/25V	4.7μF/25V	X
C9504	X	4.7μF/25V	4.7μF/25V	X
D9501	X	IN4003	IN4003	X
D9502	X	IS2471	IS2471	X
C9553	X	0.1μF	0.1μF	X
C9554	X	0.1μF	0.1μF	X
C9501	X	8200PF	8200PF	X
C9502	X	8200PF	8200PF	X
C9511	X	100PF	100PF	X
C9512	X	100PF	100PF	X
C9513	X	100PF	100PF	X
C9514	X	100PF	100PF	X
C9505	X	47PF	47PF	X
C9506	X	47PF	47PF	X
C9551	X	47PF	47PF	X
C9507	X	10μF/16V	10μF/16V	X
C9508	X	10μF/16V	10μF/16V	X
C9509	X	10μF/16V	10μF/16V	X
C9510	X	10μF/16V	10μF/16V	X
C9555	X	2.2μF/50V	2.2μF/50V	X
C9556	X	2.2μF/50V	2.2μF/50V	X
C9552	X	4.7μF/6.3V	47μF/6.3V	X
C8101	X	X	X	330PF
C8102	X	X	X	330PF
C8103	X	X	X	330PF
C8104	X	X	X	330PF
C8105	X	X	X	330PF
C8106	X	X	X	330PF
C8107	X	X	X	330PF
C8108	X	X	X	330PF
C8109	X	X	X	330PF
C8110	X	X	X	330PF
C8111	100PF	100PF	100PF	330PF
C8112	100PF	100PF	100PF	330PF
C8113	100PF	100PF	100PF	330PF
C8114	100PF	100PF	100PF	330PF
C8115	100PF	100PF	100PF	330PF
C8116	100PF	100PF	100PF	330PF
C8117	100PF	100PF	100PF	330PF
C8118	100PF	100PF	100PF	330PF
C8119	100PF	100PF	100PF	330PF
C8120	100PF	100PF	100PF	330PF
C8121	100PF	100PF	100PF	330PF
C8122	100PF	100PF	100PF	330PF
C8303	X	X	X	330PF
C8304	X	X	X	330PF
RL9501	X	DS2Y	DS2Y	X
J9501	X	Phone Plat	Phone Plat	X
L9501	X	100μH	100μH	X
L9502	X	100μH	100μH	X
Q9501	X	2SC1545	2SC1545	X
R8315	X	X	X	100PF
R8316	X	X	X	100PF

X: Not Used

NOTES:

1. All resistance values are in ohms. K = 1,000
2. All capacitance values are in microfarads. $P = \frac{1}{1,000,000}$

LV - 117

Schematic Diagram (2/2)

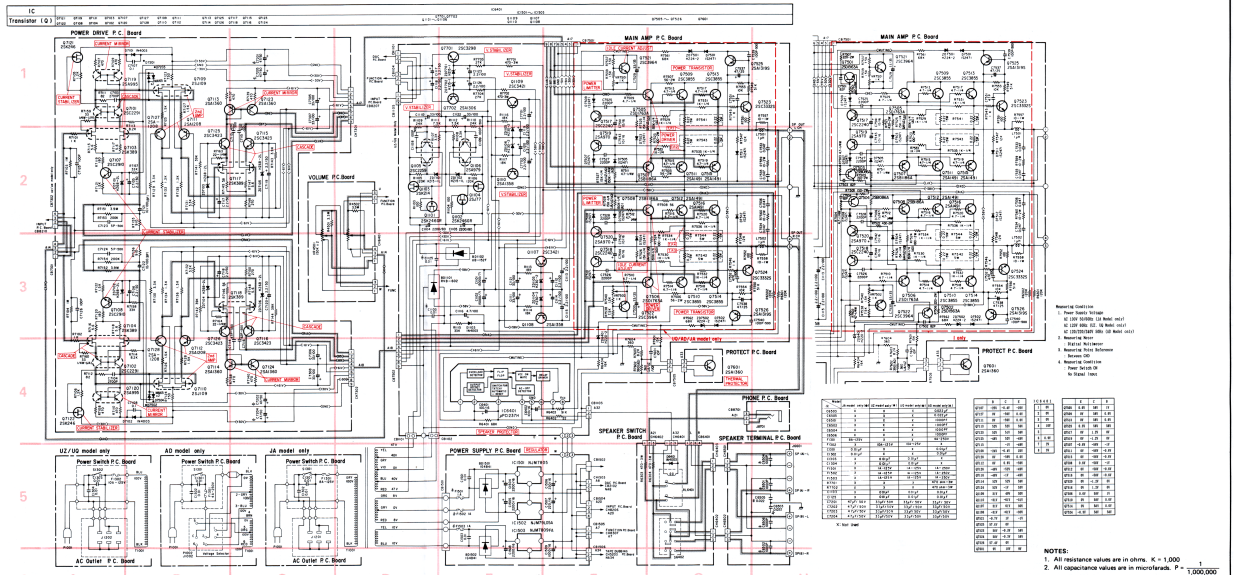

LV - 117

Electrical Parts List

Resistor : Carbon resistors under 1/4 watts are not mentioned in the parts list, please confirm them by schematic diagram.
uF = microfarads, pF = picofarads

Abbreviations

RES. = Resistor	CAP. = Capacitor
C.F. = Carbon Film	ELY. = Electrolytic
M.F. = Metal Film	CER. = Ceramic
M.O. = Metal Oxide Film	MYL. = Mylar
M.P. = Metal Plate	TAN. = Tantalum
TR. = Transistor	POLY. = Polystyrol
TRANS. = Transformer	PP. = Polypropylene
CP. = Chip	PLT. = Polyethylene

Symbol No.	Part No.	Description		
		Main Amp P. C. Board		
		IC		
IC6401	51T60527F01	μ PC1237H		
		Transistors		
Q1101	48T66948F03	FET, 2SK246		
Q1102	48T66948F03	FET, 2SK246		
Q1105	48T71942F01	2SC2259		
Q1106	48T53430F01	2SA979		
Q1107	48T69176F01	2SC3421		
Q1108	48T69177F01	2SA1358		
Q1109	48T69176F01	2SC3421		
Q1110	48T69177F01	2SA1358		
■ Q7501	48T90759F02	2SD1563A		
■ Q7502	48T90759F02	2SD1563A		
■ Q7503	48T90758F02	2SB1086A		
■ Q7504	48T90758F02	2SB1086A		
Q7517	48T53301F01	2SC2240		
Q7518	48T53301F01	2SC2240		
Q7519	48T52545F01	2SA970		
Q7520	48T52545F01	2SA970		
Q7523	48T82195F01	2SC3332S		
Q7524	48T82195F01	2SC3332S		
Q7525	48T82194F01	2SA1319S		
Q7526	48T82194F01	2SA1319S		
■ Q7701	48T60555F01	2SC3298		
★ Q7701	48T60555F01	2SC3298		
■ Q7702	48T60556F01	2SA1306		
★ Q7702	48T60556F01	2SA1306		

Symbol No.	Part No.	Description		
		Diodes		
D1103	48S40477U01	IN4003		
D7501	48T68764F01	1S2471		
D7502	48T68764F01	1S2471		
D7503	48T68764F01	1S2471		
D7504	48T68764F01	1S2471		
D7505	48T68764F01	1S2471		
D7506	48T68764F01	1S2471		
D7507	48T68764F01	1S2471		
D7508	48T68764F01	1S2471		
D7509	48T68764F01	1S2471		
D7510	48T68764F01	1S2471		
D7511	48T68764F01	1S2471		
D7512	48T68764F01	1S2471		
ZD1101	48T52741F46	Zener, HZ15-1L		
ZD1102	48T52741F46	Zener, HZ15-1L		
ZD1103	48T52739F98	Zener, HZ30-2		
ZD1104	48T52739F98	Zener, HZ30-2		
ZD1105	48T52739F98	Zener, HZ30-2		
ZD1106	48T52739F98	Zener, HZ30-2		
ZD6401	48T52739F86	Zener, HZ20-2		
ZD7501	48T52739F92	Zener, HZ24-2		
ZD7502	48T52739F92	Zener, HZ24-2		
■ ZD7701	48T52739F76	Zener, HZ15-1		
★ ZD7701	48T52739F76	Zener, HZ15-1		
■ ZD7702	48T52739F76	Zener, HZ15-1		
★ ZD7702	48T52739F76	Zener, HZ15-1		
BD1102	48T62282F02	UB-152F		
		Inductors		
L7501	24T74372F02	Coil, VERTI, 1 μ H		
L7502	24T74372F02	Coil, VERTI, 1 μ H		
		Capacitors		
● C1101	23T93022F01	ELY., 15000 μ F/71V		
■ C1101	23T83858F01	ELY., 15000 μ F/71V		
★ C1101	23T83858F01	ELY., 15000 μ F/71V		
▲ C1101	23T83858F01	ELY., 15000 μ F/71V		
● C1102	23T93022F01	ELY., 15000 μ F/71V		

Notes : ● : For Japanese model only (JA), ■ : For North American model only (UZ),
★ : For Canadian model only (UQ), ▲ : For European model only (AD), Others : Common.

Symbol No.	Part No.	Description
■ C1102	23T83858F01	ELY., 15000 μ F/71V
★ C1102	23T83858F01	ELY., 15000 μ F/71V
▲ C1102	23T83858F01	ELY., 15000 μ F/71V
▲ C1103	21T68834F01	CER., 0.01 μ F
■ C1103	21T68834F01	CER., 0.01 μ F
★ C1103	21T68834F01	CER., 0.01 μ F
● C1104	23T83857F01	ELY., 2200 μ F/80V
■ C1104	23T83856F01	ELY., 2200 μ F/80V
★ C1104	23T83856F01	ELY., 2200 μ F/80V
▲ C1104	23T83856F01	ELY., 2200 μ F/80V
● C1105	23T83857F01	ELY., 2200 μ F/80V
■ C1105	23T83856F01	ELY., 2200 μ F/80V
★ C1105	23T83856F01	ELY., 2200 μ F/80V
▲ C1105	23T83856F01	ELY., 2200 μ F/80V
C1108	08T81196F34	Mica, 100pF/500V
C1109	08T81196F34	Mica, 100pF/500V
C1110	23T00133L66	ELY., 33 μ F/100V
C1111	23T00133L66	ELY., 33 μ F/100V
C1112	23T90772F98	ELY., 2.2 μ F/100V
C1113	23T00138L73	ELY., 2.2 μ F/100V
C1114	23T90772F98	ELY., 2.2 μ F/100V
C1115	23T00138L73	ELY., 2.2 μ F/100V
C1116	23T00138L75	ELY., 4.7 μ F/100V
C1117	23T00138L46	ELY., 2.2 μ F/50V
C1118	23T00138L46	ELY., 2.2 μ F/50V
C1119	23T90772F98	ELY., 2.2 μ F/100V
C1120	23T90772F98	ELY., 2.2 μ F/100V
C1121	23T00133L66	ELY., 33 μ F/100V
C1122	23T00133L66	ELY., 33 μ F/100V
● C1123	23T00138L73	ELY., 2.2 μ F/100V
▲ C1123	23T90772F98	ELY., 2.2 μ F/100V
■ C1123	23T90772F98	ELY., 2.2 μ F/100V
★ C1123	23T90772F98	ELY., 2.2 μ F/100V
● C1124	23T00138L73	ELY., 2.2 μ F/100V
▲ C1124	23T90772F98	ELY., 2.2 μ F/100V
■ C1124	23T90772F98	ELY., 2.2 μ F/100V
★ C1124	23T90772F98	ELY., 2.2 μ F/100V
▲ C1125	21T68834F01	CER., 0.01 μ F
■ C1125	21T68834F01	CER., 0.01 μ F
★ C1125	21T68834F01	CER., 0.01 μ F
C6401	23T00138L21	ELY., 100 μ F/16V
C6402	23T00138L21	ELY., 100 μ F/16V
■ C7501	08T81196F32	Mica, 82pF/500V
■ C7502	08T81196F32	Mica, 82pF/500V
■ C7503	08T81196F32	Mica, 82pF/500V
■ C7504	08T81196F32	Mica, 82pF/500V
C7525	08T00152L13	P.P., 2200pF
C7526	08T00152L13	P.P., 2200pF
C7527	08T00152L13	P.P., 2200pF
C7528	08T00152L13	P.P., 2200pF

Symbol No.	Part No.	Description
C7529	23T00149L44	ELY., 33 μ F/35V
C7530	23T00149L44	ELY., 33 μ F/35V
C7531	08T81196F25	Mica, 47pF/500V
C7532	08T81196F25	Mica, 47pF/500V
C7533	08T93244F56	P.P., 0.047 μ F
C7534	08T93244F56	P.P., 0.047 μ F
C7535	08T93244F56	P.P., 0.047 μ F
C7536	08T93244F56	P.P., 0.047 μ F
C7537	23T00138L30	ELY., 47 μ F/25V
C7538	23T00138L30	ELY., 47 μ F/25V
C7539	08T81196F34	Mica, 100pF/500V
C7540	08T81196F34	Mica, 100pF/500V
C7541	23T00149L20	ELY., 10 μ F/16V
C7542	23T00149L20	ELY., 10 μ F/16V
C7543	23T00149L20	ELY., 10 μ F/16V
C7544	23T00149L20	ELY., 10 μ F/16V
C7601	08T61939F11	CER., 10pF
■ C7701	23T00138L73	ELY., 2.2 μ F/100V
★ C7701	23T00138L73	ELY., 2.2 μ F/100V
■ C7702	23T00138L73	ELY., 2.2 μ F/100V
★ C7702	23T00138L73	ELY., 2.2 μ F/100V

Resistors

● R7505	06T92264F19	M.F., 56 ohm 2W
▲ R7505	06T92264F19	M.F., 56 ohm 2W
■ R7505	06T92264F29	M.F., 150 ohm 2W
★ R7505	06T92264F19	M.F., 56 ohm 2W
● R7506	06T92264F19	M.F., 56 ohm 2W
▲ R7506	06T92264F19	M.F., 56 ohm 2W
■ R7506	06T92264F33	M.F., 220 ohm 2W
★ R7506	06T92264F19	M.F., 56 ohm 2W
● R7507	06T92264F19	M.F., 56 ohm 2W
▲ R7507	06T92264F19	M.F., 56 ohm 2W
■ R7507	06T92264F33	M.F., 220 ohm 2W
★ R7507	06T92264F19	M.F., 56 ohm 2W
● R7508	06T92264F19	M.F., 56 ohm 2W
▲ R7508	06T92264F19	M.F., 56 ohm 2W
■ R7508	06T92264F29	M.F., 150 ohm 2W
★ R7508	06T92264F19	M.F., 56 ohm 2W
R7523	06T92264F25	M.F., 100 ohm 2W
R7524	06T92264F25	M.F., 100 ohm 2W
R7541	06T67397F01	MPC 0.22 ohm 5W
R7542	06T67397F01	MPC 0.22 ohm 5W
R7543	06T67397F01	MPC 0.22 ohm 5W
R7544	06T67397F01	MPC 0.22 ohm 5W
R7557	06T92263F01	M.F., 10 ohm 1W
R7558	06T92263F01	M.F., 10 ohm 1W
R7559	06T92264F01	M.F., 10 ohm 2W

Notes : ● : For Japanese model only (JA), ■ : For North American model only (UZ),
★ : For Canadian model only (UQ), ▲ : For European model only (AD), Others : Common.

Symbol No.	Part No.	Description
R7560	06T92264F01	M.F., 10 ohm 2W
VR7501	18C41732G07	Variable, 1K ohm
VR7502	18C41732G07	Variable, 1K ohm
■ R7701	06T92265F41	M.F., 470 ohm 3W
★ R7701	06T92265F41	M.F., 470 ohm 3W
■ R7702	06T92265F41	M.F., 470 ohm 3W
★ R7702	06T92265F41	M.F., 470 ohm 3W

Power Switch P. C. Board

Switches

Symbol No.	Part No.	Description
● S1301	40T92255F02	Push SDLD (Power)
▲ S1301	40T92255F02	Push SDLD (Power)
■ S1302	40T92612F01	Push (Power)
★ S1302	40T92612F01	Push (Power)

Fuses

Symbol No.	Part No.	Description
● F1301	65T62673F08	FGT40, 8A−125V
▲ F1301	65T42077U22	Semko, 4A−250V
■ F1302	65T65292F01	10A−125V
★ F1302	65T65292F01	10A−125V

Capacitors

Symbol No.	Part No.	Description
● C1301	08T57437F09	CER., 0.01 μF
● C1302	08T57437F09	CER., 0.01 μF
■ C1303	08T57437F09	CER., 0.01 μF
★ C1303	08T57437F09	CER., 0.01 μF
■ C1304	08T57437F09	CER., 0.01 μF
★ C1304	08T57437F09	CER., 0.01 μF

Power Supply P. C. Board

IC

Symbol No.	Part No.	Description
IC1501	51T80338F01	NJM7805
IC1502	51T67538F01	NJM79L05A
IC1503	51T83847F01	NJM7809FA

Diodes

Symbol No.	Part No.	Description
BD1501	48T61415F03	Bridge, 1G4B41
BD1502	48T61415F03	Bridge, 1G4B41

Fuses

Symbol No.	Part No.	Description
▲ F1501	65T42077U16	Semko, 1A−250V
■ F1501	65T66926F13	1A−125V
★ F1501	65T66926F13	1A−125V
▲ F1502	65T42077U16	Semko, 1A−250V
■ F1502	65T66926F13	1A−125V
★ F1502	65T66926F13	1A−125V
▲ F1503	65T42077U16	Semko, 1A−250V
■ F1503	65T66926F13	1A−125V
★ F1503	65T66926F13	1A−125V

Capacitors

Symbol No.	Part No.	Description
C1501	21T68834F01	CER., 0.01 μF
C1503	21T68834F01	CER., 0.01 μF
C1504	23T00149L30	ELY., 2200 μF/16V
C1505	23T00149L30	ELY., 2200 μF/16V
C1506	23T00149L26	ELY., 220 μF/16V
C1507	23T00149L26	ELY., 220 μF/16V
C1508	23T00149L30	ELY., 2200 μF/16V
C1509	23T00149L29	ELY., 1000 μF/16V

DAC P. C. Board

IC's

Symbol No.	Part No.	Description
IC2101	51T91084F02	YM3623B
IC2102	51T84724F02	SM5807 BP
IC2103	51T80318F01	PCM56JP
IC2104	51T67480F01	μPD4053BC
IC2105	51T72306F01	μPD4052BC
IC2106	51T80136F01	M5238P
IC2107	51T80136F01	M5238P
IC2108	51T92601F01	LP22D5B3YS
IC2109	51T92601F01	LP22D5B3YS
IC2110	51T61180F02	NJM78L05A
IC2111	51T67538F01	NJM79L05A
IC2112	51T83506F01	TC74HC00P

Transistors

Symbol No.	Part No.	Description
Q2101	48T82195F01	2SC3332S
Q2102	48T82195F01	2SC3332S
Q2103	48T52508F01	2SC1545
Q2104	48T52508F01	2SC1545
Q2105	48T52508F01	2SC1545

Notes : ● : For Japanese model only (JA), ■ : For North American model only (UZ),
★ : For Canadian model only (UQ), ▲ : For European model only (AD), Others : Common.

Symbol No.	Part No.	Description		
Q2106	48T52508F01	2SC1545		
Q2107	48T82194F01	2SA1319S		
Q2108	48T52508F01	2SC1545		
Q2110	48T82195F01	2SC3332S		
Q2111	48T52508F01	2SC1545		
Diodes				
D2101	48T44813F01	MA165TA		
D2102	48T44813F01	MA165TA		
D2103	48T44813F01	MA165TA		
D2104	48S40477U01	IN4003		
D2105	48S40477U01	IN4003		
D2106	48T44813F01	MA165TA		
D2107	48T44813F01	MA165TA		
D2108	48T44813F01	MA165TA		
D2109	48T44813F01	MA165TA		
Relays/Crystal				
RL2101	80T68404F02	Relay, G5A 237P-5V		
RL2102	80T68404F02	Relay, G5A 237P-5V		
X2101	48T84727F01	16.93MHz		
Capacitors				
C2101	08T57851F32	T.F., 4700pF		
C2102	08T55260F13	CER., 10pF		
C2103	08T55260F13	CER., 10pF		
C2104	08T57851F07	T.F., 0.033 μF		
C2105	23T00149L17	ELY., 1000 μF/10V		
C2106	23T00149L17	ELY., 1000 μF/10V		
C2107	08T57851F13	T.F., 0.1 μF		
C2109	23T00149L14	ELY., 220 μF/10V		
C2110	23T00149L53	ELY., 2.2 μF/50V		
C2111	23T00149L53	ELY., 2.2 μF/50V		
C2112	23T00149L53	ELY., 2.2 μF/50V		
C2115	23T00149L35	ELY., 47 μF/25V		
C2116	23T00149L35	ELY., 47 μF/25V		
C2117	23T00149L35	ELY., 47 μF/25V		
C2118	23T00149L35	ELY., 47 μF/25V		
C2119	23T90772F30	ELY., 470 μF/16V		
C2120	23T90772F30	ELY., 470 μF/16V		
C2123	08T93192F41	P.P., 470pF		
C2124	08T93192F41	P.P., 470pF		
C2127	08T00152L03	P.P., 330pF		

Symbol No.	Part No.	Description		
C2128	08T00152L03	P.P., 330pF		
C2129	08T00152L15	P.P., 3300pF		
C2130	08T00152L15	P.P., 3300pF		
C2131	23T71210F18	ELY., 47 μF/25V (B.P.)		
C2132	23T71210F18	ELY., 47 μF/25V (B.P.)		
C2134	23T00149L13	ELY., 100 μF/10V		
C2135	23T00149L35	ELY., 47 μF/25V		
C2136	23T00149L35	ELY., 47 μF/25V		
C2137	23T00149L35	ELY., 47 μF/25V		
C2139	23T00149L21	ELY., 22 μF/16V		
C2140	23T00149L14	ELY., 220 μF/10V		
C2141	23T00149L54	ELY., 3.3 μF/50V		
Resistor				
VR2101	18T43733P20	Variable, 100k ohm 1/2W		
DAC Pin Jack P. C. Board				
Transformer/Jack				
T2201	25T80344F01	Trans, Pulse		
J2201	09T90201F02	Plate, Phono, B0049 (1P) (DAC OUT)		
Video P. C. Board				
IC's				
IC2301	51T80475F01	TC74HCU04P		
IC2302	51T83506F01	TC74HC00P		
IC2303	51T84774F01	TORX172		
IC9101	51T80996F01	M51321P		
IC9102	51T80995F01	M51320P		
Coils/Switch				
L2302	24T50508F34	Coil, Inductor 100 μH		
L9101	24T83852F04	Coil, PF 100 μH		
L9102	24T83852F04	Coil, PF 100 μH		
S2301	40T71732F02	Slide SSSP12 (COAX., OPT)		

Symbol No.	Part No.	Description		
Jacks				
J2301	09T84775F01	Plate, PH RA-B ORG AU (DIG-1)		
J2302	09T84775F01	Plate, PH RA-B ORG AU (COAX)		
J9101-1	09T72603F04	Plate, Phono (4P) (LD/VHD)		
J9101-2	09T72603F04	Plate, Phono (4P) (TAPE/VIDEO-3)		
J9101-3	09T72603F04	Plate, Phono (4P) (TAPE 2 REC-OUT)		
J9101-4	09T72603F04	Plate, Phono (4P) (VIDEO MONI)		
Capacitors				
C2301	23T00149L11	ELY., 33 μF/10V		
C2303	23T00149L11	ELY., 33 μF/10V		
C2306	23T00149L11	ELY., 33 μF/10V		
C2310	23T00149L11	ELY., 33 μF/10V		
C2311	23T00149L16	ELY., 470 μF/10V		
C9101	23T00149L21	ELY., 22 μF/16V		
C9102	23T00149L21	ELY., 22 μF/16V		
C9103	23T00149L17	ELY., 1000 μF/10V		
C9104	23T00149L17	ELY., 1000 μF/10V		
C9105	23T00149L20	ELY., 10 μF/16V		
C9106	08T61952F02	CER., 0.1 μF		
C9107	23T00149L20	ELY., 10 μF/16V		
C9108	08T61952F02	CER., 0.1 μF		
C9109	23T00149L20	ELY., 10 μF/16V		
C9110	23T00149L20	ELY., 10 μF/16V		
C9111	23T00149L17	ELY., 1000 μF/10V		
C9112	23T00149L17	ELY., 1000 μF/10V		
C9113	23T00149L20	ELY., 10 μF/16V		
C9114	23T00149L20	ELY., 10 μF/16V		
C9115	08T61952F02	CER., 0.1 μF		
C9116	23T00149L20	ELY., 10 μF/16V		
C9117	08T57851F13	T.F., 0.1 μF		
C9118	23T00149L16	ELY., 470 μF/10V		
C9119	23T00149L16	ELY., 470 μF/10V		
C9120	08T57851F13	T.F., 0.1 μF		
C9121	23T00149L20	ELY., 10 μF/16V		
C9122	23T00149L20	ELY., 10 μF/16V		
C9123	23T00149L21	ELY., 22 μF/16V		

Symbol No.	Part No.	Description		
Digital LED P. C. Board				
LED's				
LD2401	48T74519F06	PR3668S (RED)		
LD2402	48T74519F06	PR3668S (RED)		
Function P. C. Board				
IC's				
IC4101	51T80136F02	M5238L		
IC4102	51T80136F02	M5238L		
Switches				
S4301	40T92167F01	Push, 1KEY (TONE Switch)		
S8401-1	40T80727F01	Push, SPEC61 (CD)		
S8401-2	40T80727F01	Push, SPEC61 (TU)		
S8401-3	40T80727F01	Push, SPEC61 (L2)		
S8401-4	40T80727F01	Push, SPEC61 (L1)		
S8401-5	40T80727F01	Push, SPEC61 (LD/VHD)		
S8401-6	40T80727F01	Push, SPEC61 (TAPE)		
S8402	40T83838F01	Push, 1P (DIGITAL)		
S8403-1	40T83687F01	Push, 2P (SIGNAL PROCESSOR)		
S8403-2	40T83687F01	Push, 2P (MODE)		
S8404	40T83838F01	Push, 1P (LINE STRAIGHT)		
S8405-1	40T80735F01	Push, SPEC22 (LOUDNESS)		
S8405-2	40T80735F01	Push, SPEC22 (MUTING)		
S8406-1	40T83790F01	Push, 2P (DIGITAL-2)		
S8406-2	40T83790F01	Push, 2P (DIGITAL-1)		
S8407	40T83838F01	Push, 1P (FRONT/REAR)		

Symbol No.	Part No.	Description		
Lamps				
● PL8301	65T83851F01	Pilot, 9V−60mA		
▲ PL8301	65T83851F03	Pilot, 9V−60mA		
■ PL8301	65T83851F03	Pilot, 9V−60mA		
★ PL8301	65T83851F03	Pilot, 9V−60mA		
● PL8302	65T83851F01	Pilot, 9V−60mA		
▲ PL8302	65T83851F03	Pilot, 9V−60mA		
■ PL8302	65T83851F03	Pilot, 9V−60mA		
★ PL8302	65T83851F03	Pilot, 9V−60mA		
Capacitors				
C4101	08T81196F34	Mica, 100 μF/500V		
C4102	08T81196F34	Mica, 100 μF/500V		
C4103	23T71210F25	ELY., 2.2 μF/50V (B.P.)		
C4104	23T71210F25	ELY., 2.2 μF/50V (B.P.)		
C4105	23T00134L64	ELY., 2.2 μF/50V		
C4106	23T00134L64	ELY., 2.2 μF/50V		
C4107	08T81196F25	Mica, 47 μF/500V		
C4108	08T81196F25	Mica, 47 μF/500V		
C4109	23T71210F12	ELY., 4.7 μF/25V (B.P.)		
C4110	23T71210F12	ELY., 4.7 μF/25V (B.P.)		
C4111	08T57851F15	T.F., 0.15 μF		
C4112	08T57851F15	T.F., 0.15 μF		
C4113	08T57851F05	T.F., 0.022 μF		
C4114	08T57851F05	T.F., 0.022 μF		
C4115	23T71210F12	ELY., 4.7 μF/25V (B.P.)		
C4116	23T71210F12	ELY., 4.7 μF/25V (B.P.)		
C4117	08T57851F35	T.F., 8200pF		
C4118	08T57851F35	T.F., 8200pF		
C4201	23S57007F21	ELY., 10 μF/25V		
C4202	23S57007F21	ELY., 10 μF/25V		
▲ C8303	08T00152L03	P.P., 330pF		
▲ C8304	08T00152L03	P.P., 330pF		
C8305	08T00152L08	P.P., 820pF		
C8306	08T00152L08	P.P., 820pF		
C8307	08T57851F03	T.F., 0.015 μF		
C8308	08T57851F03	T.F., 0.015 μF		

Symbol No.	Part No.	Description		
Resistors				
VR4101	18T92053F01	Volume, 10K ohm B×2		
VR4102	18T92053F01	Volume, 10K ohm B×2		
VR8401	18T80739F01	Volume, Balance, 250K ohm		
Volume P. C. Board				
Resistor				
VR4501	18T80738F02	Volume, Rotary 150k ohm BX2		
Dubbing P. C. Board				
Switches				
S5301	40T83683F02	Push (3P) (TAPE 1, 2, 3)		
S5302	40T83684F01	Push (2P) (REC OFF, DUBBING)		
Lamps				
PL5101	65T80326F01	Pilot, 5V−150mA		
PL5102	65T80326F01	Pilot, 5V−150mA		
PL5103	65T80326F01	Pilot, 5V−150mA		
Capacitors				
C5102	23T00149L16	ELY., 470 μF/10V		
C5103	23S40657F04	ELY., 220 μF/6.3V		
Tape LED P. C. Board				
LED's				
LD5301	48T74519F06	PR3668S (RED)		
LD5302	48T74519F06	PR3668S (RED)		
LD5303	48T74519F06	PR3668S (RED)		
LD5304	48T74519F06	PR3668S (RED)		
LD5305	48T74519F06	PR3668S (RED)		
LD5306	48T74519F06	PR3668S (RED)		

Notes : ● : For Japanese model only (JA), ■ : For North American model only (UZ),
★ : For Canadian model only (UQ), ▲ : For European model only (AD), Others : Common.

Symbol No.	Part No.	Description		
		Speaker Switch P. C. Board		
		Diode/Relays/Switch		
	D6401	48S40477U01 IN4003		
●	RL6401	80T83849F02 Relay, OMI-SS-9V		
■	RL6401	80T83849F02 Relay, OMI-SS-9V		
▲	RL6401	80T83849F02 Relay, OMI-SS-9V		
★	RL6401	80T70844F03 Relay, G5R-2232P-9V		
	S6402	40T71729F02 Switch, Push SPUN21 (Speaker Switch)		
		Resistors		
	R6303	06T92265F41 M.F., 470 ohm 3W		
	R6304	06T92265F41 M.F., 470 ohm 3W		
		Speaker Terminal P. C. Board		
		Jack		
	J6601	09T83850F02 Terminal, Speaker (8P)		
		Capacitors		
▲	C6501	08S40805F07 CER., 1000pF		
▲	C6502	08S40805F07 CER., 1000pF		
▲	C6503	08S40805F21 CER., 0.022 μF		
▲	C6504	08S40805F07 CER., 1000pF		
▲	C6505	08S40805F21 CER., 0.022 μF		
▲	C6506	08S40805F07 CER., 1000pF		
		Power Drive P. C. Board		
		Transistors		
	Q7101	48T72598F01 2SC2291		
	Q7102	48T72598F01 2SC2291		
	Q7103	48T61719F01 FET, 2SK389		
	Q7104	48T61719F01 FET, 2SK389		
	Q7107	48T72889F01 2SC2910		
	Q7108	48T72889F01 2SC2910		
	Q7109	48T71752F03 FET, 2SJ109		
	Q7110	48T71752F03 FET, 2SJ109		
	Q7111	48T72888F01 2SA1208		
	Q7112	48T72888F01 2SA1208		

Symbol No.	Part No.	Description		
	Q7113	48T64375F01 2SA1360		
	Q7114	48T64375F01 2SA1360		
	Q7115	48T64376F01 2SC3423		
	Q7116	48T64376F01 2SC3423		
	Q7117	48T61719F01 FET, 2SK389		
	Q7118	48T61719F01 FET, 2SK389		
	Q7119	48T72597F01 2SA995		
	Q7120	48T72597F01 2SA995		
●	Q7121	48T66948F01 FET, 2SK246		
■	Q7121	48T66948F03 FET, 2SK246		
▲	Q7121	48T66948F03 FET, 2SK246		
★	Q7121	48T66948F03 FET, 2SK246		
●	Q7122	48T66948F01 FET, 2SK246		
■	Q7122	48T66948F03 FET, 2SK246		
▲	Q7122	48T66948F03 FET, 2SK246		
★	Q7122	48T66948F03 FET, 2SK246		
	Q7123	48T64375F01 2SA1360		
	Q7124	48T64375F01 2SA1360		
	Q7125	48T64376F01 2SC3423		
	Q7126	48T64376F01 2SC3423		
	Q7127	48T72888F01 2SA1208		
	Q7128	48T72888F01 2SA1208		
		Diodes		
	D7101	48S40477U01 IN4003		
	D7102	48S40477U01 IN4003		
■	D7201	48T44813F01 MA165TA		
■	D7202	48T44813F01 MA165TA		
■	D7203	48T44813F01 MA165TA		
■	D7204	48T44813F01 MA165TA		
	ZD7101	48T52741F05 Zener, HZ6B-2L		
	ZD7102	48T52741F05 Zener, HZ6B-2L		
	ZD7103	48T52741F05 Zener, HZ6B-2L		
	ZD7104	48T52741F05 Zener, HZ6B-2L		
	ZD7105	48T52741F05 Zener, HZ6B-2L		
	ZD7106	48T52741F05 Zener, HZ6B-2L		
		Capacitors		
	C7103	08T57851F29 T.F., 2700pF		
	C7104	08T57851F29 T.F., 2700pF		
	C7105	23T00138L46 ELY., 2.2 μF/50V		
	C7106	23T00138L46 ELY., 2.2 μF/50V		
	C7107	08T57851F13 T.F., 0.1 μF		
	C7108	08T57851F13 T.F., 0.1 μF		
	C7113	08T81196F25 Mica, 47pF/500V		
	C7114	08T81196F25 Mica, 47pF/500V		
	C7115	08T81196F29 Mica, 62pF/500V		
	C7116	08T81196F29 Mica, 62pF/500V		

Notes : ● : For Japanese model only (JA), ■ : For North American model only (UZ),
★ : For Canadian model only (UQ), ▲ : For European model only (AD), Others : Common.

Symbol No.	Part No.	Description
	C7117	23T00138L46 ELY., 2.2 μ F/50V
	C7118	23T00138L46 ELY., 2.2 μ F/50V
	C7119	23T00138L46 ELY., 2.2 μ F/50V
	C7120	23T00138L46 ELY., 2.2 μ F/50V
	C7121	23T81031F05 ELY., (B.P.) 10 μ F/100V
	C7122	23T81031F05 ELY., (B.P.) 10 μ F/100V
	C7123	08T81196F04 Mica, 5pF/500V
	C7124	08T81196F04 Mica, 5pF/500V
	C7125	08T00151L01 P.P., 100pF
	C7126	08T00151L01 P.P., 100pF
●	C7201	23T00132L25 ELY., 47 μ F/50V
▲	C7201	23T00132L24 ELY., 33 μ F/50V
■	C7201	23T00132L24 ELY., 33 μ F/50V
★	C7201	23T00132L24 ELY., 33 μ F/50V
●	C7202	23T00132L25 ELY., 47 μ F/50V
▲	C7202	23T00132L24 ELY., 33 μ F/50V
■	C7202	23T00132L24 ELY., 33 μ F/50V
★	C7202	23T00132L24 ELY., 33 μ F/50V
●	C7203	23T00132L25 ELY., 47 μ F/50V
▲	C7203	23T00132L24 ELY., 33 μ F/50V
■	C7203	23T00132L24 ELY., 33 μ F/50V
★	C7203	23T00132L24 ELY., 33 μ F/50V
●	C7204	23T00132L25 ELY., 47 μ F/50V
▲	C7204	23T00132L24 ELY., 33 μ F/50V
■	C7204	23T00132L24 ELY., 33 μ F/50V
★	C7204	23T00132L24 ELY., 33 μ F/50V
	C7305	23T00133L66 ELY., 33 μ F/100V
	C7306	23T00133L66 ELY., 33 μ F/100V
	C7307	23T00133L66 ELY., 33 μ F/100V
	C7308	23T00133L66 ELY., 33 μ F/100V

Sub Power P. C. Board

Transistors

●	Q7701	48T60555F01	2SC3298
▲	Q7701	48T60555F01	2SC3298
●	Q7702	48T60556F01	2SA1306
▲	Q7702	48T60556F01	2SA1306

Diodes

●	ZD7701	48T40150U70	Zener, HZ15-1
▲	ZD7701	48T40150U70	Zener, HZ15-1
●	ZD7702	48T40150U70	Zener, HZ15-1
▲	ZD7702	48T40150U70	Zener, HZ15-1

Symbol No.	Part No.	Description

Capacitors

●	C7701	23T00138L73	ELY., 2.2 μ F/100V
▲	C7701	23T00138L73	ELY., 2.2 μ F/100V
●	C7702	23T00138L73	ELY., 2.2 μ F/100V
▲	C7702	23T00138L73	ELY., 2.2 μ F/100V

Resistors

●	R7701	06T92265F41	M.F., 470 ohm 3W
▲	R7701	06T92265F41	M.F., 470 ohm 3W
●	R7702	06T92265F41	M.F., 470 ohm 3W
▲	R7702	06T92265F41	M.F., 470 ohm 3W

Input P. C. Board

IC's

■	IC9501	51T80136F02	M5238L
★	IC9501	51T80136F02	M5238L

Transistors

■	Q9501	48T52508F01	2SC1545
★	Q9501	48T52508F01	2SC1545

Diodes

	D8201	48S40477U01	IN4003
	D8202	48S40477U01	IN4003
	D8203	48S40477U01	IN4003
■	D9501	48S40477U01	IN4003
★	D9501	48S40477U01	IN4003
■	D9502	48T68764F01	1S2471
★	D9502	48T68764F01	1S2471

Coils

■	L9501	24T83852F04	PF 100 μ H
★	L9501	24T83852F04	PF 100 μ H
■	L9502	24T83852F04	PF 100 μ H
★	L9502	24T83852F04	PF 100 μ H

Notes : ● : For Japanese model only (JA), ■ : For North American model only (UZ),
★ : For Canadian model only (UQ), ▲ : For European model only (AD), Others : Common.

Symbol No.	Part No.	Description		
	Relays			
	RL8201	80T83717F01	DS2Y-S-DC9V	
	RL8202	80T83717F01	DS2Y-S-DC9V	
●	RL8203	80T83717F05	DS2Y-S-DC5V	
▲	RL8203	80T83717F03	AGY232	
■	RL8203	80T83717F03	AGY232	
★	RL8203	80T83717F03	AGY232	
■	RL9501	80T83717F01	DS2Y	
★	RL9501	80T83717F01	DS2Y	
	Switch/Jacks			
	S8101	40T81770F01	Switch, Slide	
	J8201	09T80742F01	Plate, Phono T6087 (6P) (CD, TUNER, LINE2)	
	J8202	09T80740F01	Plate, Phono T6027 (4P) (LINE1, LD/VHD)	
	J8203	09T80740F01	Plate, Phono T6027 (4P) (R1, M1)	
	J8204	09T80740F01	Plate, Phono T6027 (4P) (R2, M2)	
	J8205	09T80741F01	Plate, Phono T6085 (4P) (R3, M3)	
	J8206	09T80741F01	Plate, Phono T6085 (4P) (IN, OUT)	
■	J9501	09T84779F01	Plate, Phono (PRE-OUT)	
★	J9501	09T84779F01	Plate, Phono (PRE-OUT)	
	Capacitors			
▲	C8101	08T61939F47	CER., 330pF	
▲	C8102	08T61939F47	CER., 330pF	
▲	C8103	08T61939F47	CER., 330pF	
▲	C8104	08T61939F47	CER., 330pF	
▲	C8105	08T61939F47	CER., 330pF	
▲	C8106	08T61939F47	CER., 330pF	
▲	C8107	08T61939F47	CER., 330pF	
▲	C8108	08T61939F47	CER., 330pF	
▲	C8109	08T61939F47	CER., 330pF	
▲	C8110	08T61939F47	CER., 330pF	
●	C8111	08T55260F37	CER., 100pF	
■	C8111	08T55260F37	CER., 100pF	
★	C8111	08T55260F37	CER., 100pF	
▲	C8111	08T55260F43	CER., 330pF	
●	C8112	08T55260F37	CER., 100pF	

Symbol No.	Part No.	Description		
■	C8112	08T55260F37	CER., 100pF	
★	C8112	08T55260F37	CER., 100pF	
▲	C8112	08T55260F43	CER., 330pF	
●	C8113	08T55260F37	CER., 100pF	
■	C8113	08T55260F37	CER., 100pF	
★	C8113	08T55260F37	CER., 100pF	
▲	C8113	08T55260F43	CER., 330pF	
●	C8114	08T55260F37	CER., 100pF	
■	C8114	08T55260F37	CER., 100pF	
★	C8114	08T55260F37	CER., 100pF	
▲	C8114	08T55260F43	CER., 330pF	
●	C8115	08T55260F37	CER., 100pF	
■	C8115	08T55260F37	CER., 100pF	
★	C8115	08T55260F37	CER., 100pF	
▲	C8115	08T55260F43	CER., 330pF	
●	C8116	08T55260F37	CER., 100pF	
■	C8116	08T55260F37	CER., 100pF	
★	C8116	08T55260F37	CER., 100pF	
▲	C8116	08T55260F43	CER., 330pF	
●	C8117	08T55260F37	CER., 100pF	
■	C8117	08T55260F37	CER., 100pF	
★	C8117	08T55260F37	CER., 100pF	
▲	C8117	08T55260F43	CER., 330pF	
●	C8118	08T55260F37	CER., 100pF	
■	C8118	08T55260F37	CER., 100pF	
★	C8118	08T55260F37	CER., 100pF	
▲	C8118	08T55260F43	CER., 330pF	
●	C8119	08T55260F37	CER., 100pF	
■	C8119	08T55260F37	CER., 100pF	
★	C8119	08T55260F37	CER., 100pF	
▲	C8119	08T55260F43	CER., 330pF	
●	C8120	08T55260F37	CER., 100pF	
■	C8120	08T55260F37	CER., 100pF	
★	C8120	08T55260F37	CER., 100pF	
▲	C8120	08T55260F43	CER., 330pF	
●	C8121	08T55260F37	CER., 100pF	
■	C8121	08T55260F37	CER., 100pF	
★	C8121	08T55260F37	CER., 100pF	
▲	C8121	08T55260F43	CER., 330pF	
●	C8122	08T55260F37	CER., 100pF	
■	C8122	08T55260F37	CER., 100pF	
★	C8122	08T55260F37	CER., 100pF	
▲	C8122	08T55260F43	CER., 330pF	
	C8123	08T81196F34	Mica, 100pF/50V	
	C8124	08T81196F34	Mica, 100pF/50V	
	C8125	08T81196F34	Mica, 100pF/50V	
	C8126	08T81196F34	Mica, 100pF/50V	
■	C9501	08S65480F60	CER., 8200pF	

Notes : ● : For Japanese model only (JA), ■ : For North American model only (UZ),
★ : For Canadian model only (UQ), ▲ : For European model only (AD), Others : Common.

Symbol No.	Part No.	Description
★ C9501	08S65480F60	CER., 8200pF
■ C9502	08S65480F60	CER., 8200pF
★ C9502	08S65480F60	CER., 8200pF
■ C9503	23T71210F12	ELY., 4.7 μ F/25V (B.P.)
★ C9503	23T71210F12	ELY., 4.7 μ F/25V (B.P.)
■ C9504	23T71210F12	ELY., 4.7 μ F/25V (B.P.)
★ C9504	23T71210F12	ELY., 4.7 μ F/25V (B.P.)
■ C9505	08T61939F27	CER., 47pF
★ C9505	08T61939F27	CER., 47pF
■ C9506	08T61939F27	CER., 47pF
★ C9506	08T61939F27	CER., 47pF
■ C9507	23T42477F06	ELY., 10 μ F/16V (B.P.)
★ C9507	23T42477F06	ELY., 10 μ F/16V (B.P.)
■ C9508	23T42477F06	ELY., 10 μ F/16V (B.P.)
★ C9508	23T42477F06	ELY., 10 μ F/16V (B.P.)
■ C9509	23T42477F06	ELY., 10 μ F/16V (B.P.)
★ C9509	23T42477F06	ELY., 10 μ F/16V (B.P.)
■ C9510	23T42477F06	ELY., 10 μ F/16V (B.P.)
★ C9510	23T42477F06	ELY., 10 μ F/16V (B.P.)
■ C9511	08T61939F35	CER., 100pF
★ C9511	08T61939F35	CER., 100pF
■ C9512	08T61939F35	CER., 100pF
★ C9512	08T61939F35	CER., 100pF
■ C9513	08T61939F35	CER., 100pF
★ C9513	08T61939F35	CER., 100pF
■ C9514	08T61939F35	CER., 100pF
★ C9514	08T61939F35	CER., 100pF
■ C9551	08T61939F27	CER., 47pF
★ C9551	08T61939F27	CER., 47pF
■ C9552	23T00149L02	ELY., 47 μ F/6.3V
★ C9552	23T00149L02	ELY., 47 μ F/6.3V
■ C9553	08T57851F13	T.F., 0.1 μ F
★ C9553	08T57851F13	T.F., 0.1 μ F
■ C9554	08T57851F13	T.F., 0.1 μ F
★ C9554	08T57851F13	T.F., 0.1 μ F
■ C9555	23T00149L53	ELY., 2.2 μ F/50V
★ C9555	23T00149L53	ELY., 2.2 μ F/50V
■ C9556	23T00149L53	ELY., 2.2 μ F/50V
★ C9556	23T00149L53	ELY., 2.2 μ F/50V

Symbol No.	Part No.	Description
Function LED P. C. Board		
IC		
IC8501	51T62558F01	μ PD4069UBC
LED's		
LD8501	48T66616F02	SLR-54VR3 (RED)
LD8502	48T66616F02	SLR-54VR3 (RED)
LD8503	48T66616F02	SLR-54VR3 (RED)
LD8504	48T66616F02	SLR-54VR3 (RED)
LD8505	48T66616F02	SLR-54VR3 (RED)
LD8506	48T66616F02	SLR-54VR3 (RED)
ZD8501	48T55029F39	Zener, HZ12BP
Capacitors		
C8501	23T00136L38	ELY., 10 μ F/25V
C8502	08T61939F57	CER., 1000pF
Front AV P. C. Board		
Jacks		
J9401	09T80329F01	Plate, Phono T-6025F (FRONT L)
J9402	09T80329F01	Plate, Phono T-6025F (FRONT R)
J9403	09T80329F01	Plate, Phono T-6025F (FRONT AV)
Miscellaneous		
BD1101	48T81924F01	Bridge, RBV-602
▲ J1002	09T51831F01	Socket, Switch
● J1201	09T84523F01	Socket, Outlet
★ J1202	09T84523F01	Socket, Outlet
■ J1202	09T84523F01	Socket, Outlet
J8701	09T56010F02	Jack, Head Phone
▲ P1001	28T65151F03	Plug, AC Cord
■ P1001	28T66838F01	Plug, AC Cord
★ P1001	28T66838F01	Plug, AC Cord
● P1001	28T81592F01	Plug, AC Cord

Notes : ● : For Japanese model only (JA), ■ : For North American model only (UZ),
★ : For Canadian model only (UQ), ▲ : For European model only (AD), Others : Common.

Symbol No.	Part No.	Description		
▲ P1002	09T51830F01	Plug, Switch		
Q1103	48T71778F01	FET, 2SK214		
Q1104	48T71779F01	FET, 2SJ77		
Q7601	48T64375F01	2SA1360		
Q7505	48T90205F02	2SD1763A		
Q7506	48T90205F02	2SD1763A		
Q7507	48T90203F02	2SB1186A		
Q7508	48T90203F02	2SB1186A		
Q7509	48T81861F04	2SC3855		
Q7510	48T81861F04	2SC3855		
Q7511	48T81860F04	2SA1491		
Q7512	48T81860F04	2SA1491		
Q7513	48T81861F04	2SC3855		
Q7514	48T81861F04	2SC3855		
Q7515	48T81860F04	2SA1491		
Q7516	48T81860F04	2SA1491		
Q7521	48T92782F01	2SC3964		
Q7522	48T92782F01	2SC3964		
● T1001	25T90218F01	Trans, Power		
★ T1001	25T90218F02	Trans, Power		
■ T1001	25T90218F02	Trans, Power		
▲ T1001	25T90218F03	Trans, Power		

Symbol No.	Part No.	Description		

Notes : ● : For Japanese model only (JA), ■ : For North American model only (UZ),
★ : For Canadian model only (UQ), ▲ : For European model only (AD), Others : Common.

Packing Assembly Parts List

Symbol No.	Part No.	Description
● 101	68P81707F20	Owners Manual
■ 101	68P81707F70	Owners Manual
▲ 101	68P81707F71	Owners Manual
★ 101	68P81707F71	Owners Manual
● 102	56S71001F97	Carton, Packing
▲ 102	56S71001F98	Carton, Packing
■ 102	56S71001F98	Carton, Packing
★ 102	56S71001F98	Carton, Packing
103	56B40230G08	Sack, Polyethylene
104	56D83828F01	Tray, Packing
105	56B40442T08	Packing, Front Frame
106	56B93363F01	Pad, Packing

Notes : ● : For Japanese model only (JA), ■ : For North American model only (UZ),
★ : For Canadian model only (UQ), ▲ : For European model only (AD), Others : Common.

Packing Method View

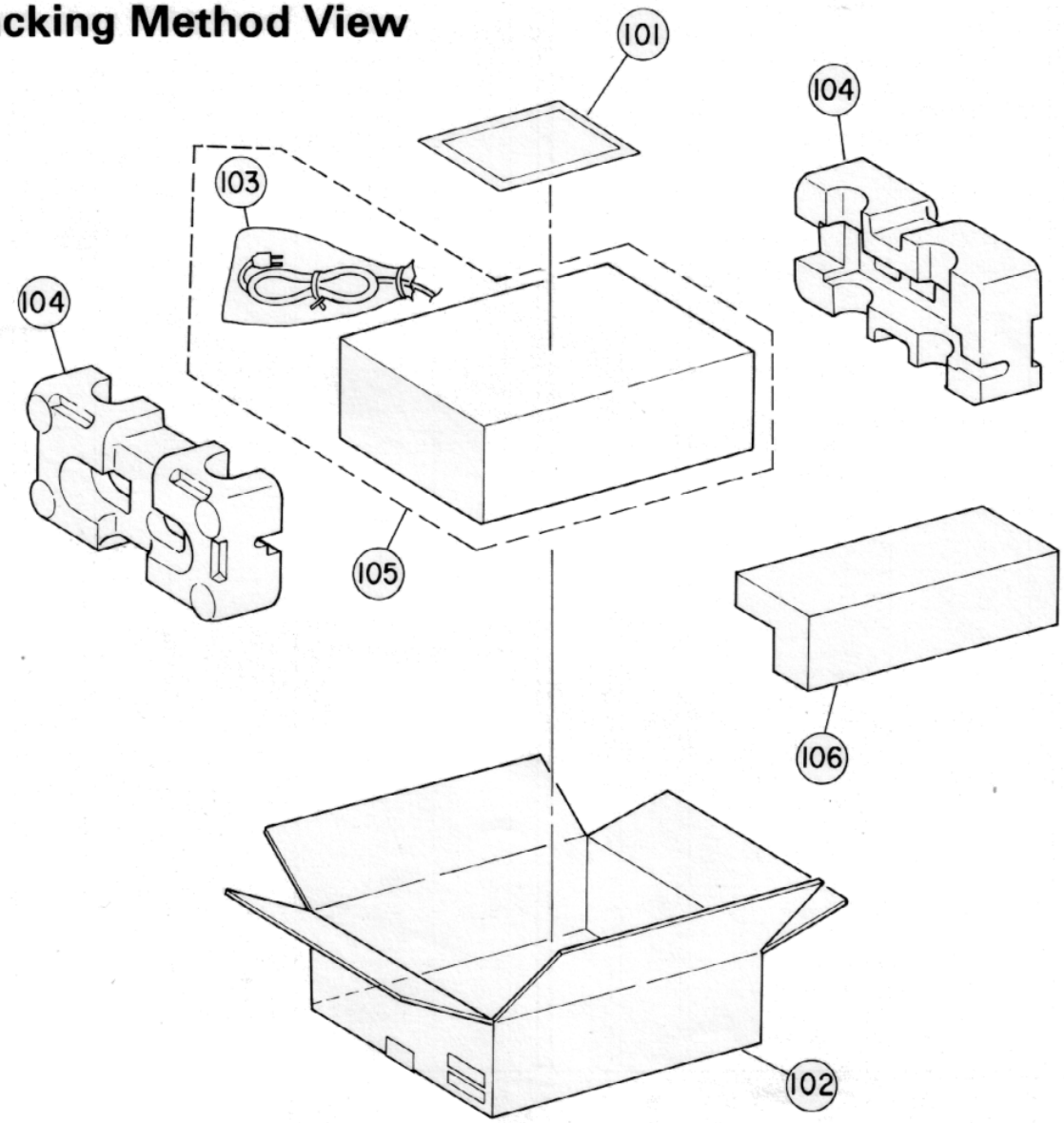

Cabinet Assembly Parts List

NOTE : The parts without part numbers are not supplied.

Symbol No.		Index	Part No.	Description
●	1	4-A	01V91200F15	Assy., Front Panel
▲	1	4-A	01V91900F80	Panel, Front
★	1	4-A	01V91900F80	Panel, Front
■	1	4-A	01V91900F80	Panel, Front
●	2		15D83824F01	Cover, Rear
■	2		15D83824F02	Cover, Rear
★	2		15D83824F03	Cover, Rear
▲	2		15D83824F04	Cover, Rear
★	3	2-A	15D83815F01	Cover, Top
▲	3	2-A	15D83815F01	Cover, Top
■	3	2-A	15D83815F01	Cover, Top
●	3	2-A	15D83815F02	Cover, Top
	4	3-A	36B83814F01	Knob, Speaker
	5	3-A	36B70885F07	Knob, Power
	6		36A80695F01	Knob, Push, Speaker
	7		36A72661F01	Knob, Push, Tone
	8	5-B	36A67333F01	Knob, Push
	9	5-A	36A80706F01	Knob, Rotary Tone
	10	6-A	36B80707F01	Knob, Rotary Volume
	12	3-C	45B83823F01	Lever, Switch
	13		03S40012G93	Screw, Tapping (M3 × 8)
	14		43A67342F01	Spacer, Switch
	16	2-B	75S72374F69	Cushion, Rubber
	17		75B80720F01	Trannleg, Set
	18		75A80719F01	Pad, Trannleg
	19		03S63857F10	Screw, Tapping (M4 × 12)
	20		75S62361F60	Cushion, Rubber
	21	3-G	40T83704F01	Switch, Rotary Flex
●	22	1-G	09T84523F02	Cover Outlet
★	22		09T84523F02	Cover, Outlet
■	22		09T84523F02	Cover, Outlet
	23		03S40036U01	Screw, Pan (M4 × 8)
	24		03S81717F01	Screw, Round (M3 × 6)
	27		03S40012G96	Screw, Tapping (M3 × 6)
	29		03A82468F01	Screw, Round (M3 × 10)
	30	2-D	47C64899F49	Shaft, Speaker Terminal P.C.Board
	31		03D40014G22	Screw, W/Washer (M3 × 8)
	32		43T45472F02	Bushing, YC20A
	34		03S40011G17	Screw, Pan (M3 × 6)
	35		03S40018G08	Screw, Tapping (M3 × 8)
	36		03S40036U12	Screw, Tapping (M4 × 6)
	39	3-B	46T92160F01	Spacer, P.C.Board (R)
	41	2-H	07A84472F01	Frame, Opt Jack
	43	4-H	43T92160F02	Spacer, P.C.Board (12R)
	44		03S44205G23	Screw, Pan (M3 × 4)
	45	2-A	29C41045P02	Lug, Wrap Around
	47		43A83239F02	Holder. Lamp D.D (N)
	48		03S43997P42	Screw, Countersink (M3 × 5)
	49		43A61758F03	Spacer, Lamp
	52		43A41837U02	Spacer, LED
	59	5-C	14A68351F01	Insulator, Jack "A"
▲	61	1-G	43B41625J02	Stopper, Cord
	61	1-G	43B41625J05	Stopper, Cord
	62		29T84161F01	Star, Lug
	63	2-F	47T83859F01	Shaft
	69	2-E	09T51960F01	Holder, Fuse
▲	70	2-E	54A63397F01	Label, Fuse (Caution)
★	70	2-E	54A63397F01	Label, Fuse (Caution)
■	70	2-E	54A63397F01	Label, Fuse (Caution)
●	70	2-E	54B62266F36	Label, Fuse (8A−125V)
	76	1-D	03C40121T17	Screw, W/ Double Washer (M3 × 8)
	78	3-E	43T45472F01	Bushing
	79		03C40121T28	Screw, W/ Double Washer (M3 × 16)
	82	3-G	42T93247F03	Wire, Sadol
▲	85	2-E	43T53136F01	Bush, Cap
★	85	2-E	43T53136F01	Bush, Cap
■	85	2-E	43T53136F01	Bush, Cap
▲	86	3-E	29T84161F03	Star, Lug Type2
★	86	3-E	29T84161F03	Star, Lug Type2
■	86	3-E	29T84161F03	Star, Lug Type2
▲	87		15A82362F01	Cover, V−Selector
★	87		47T67899F50	Shaft, Power
■	87		47C67899F50	Shaft, Power Switch P.C.Board
▲	88	1-G	03S44205G10	Screw, Pan (M3 × 10)
■	89	1-D	54B62266F28	Label, Fuse (1A−250V)

Notes : ● : For Japanese model only (JA), ■ : For North American model only (UZ),
★ : For Canadian model only (UQ), ▲ : For European model only (AD), Others : Common.

NOTE : The parts without part numbers are not supplied.

Symbol No.		Index	Part No.	Description		
▲	89	1-D	54B62266F28	Label, Fuse (1A−250V)		
★	89	1-D	54B62266F28	Label, Fuse (1A−250V)		
▲	90	1-D	09T51410F01	Holder, Fuse		
★	90	1-D	09T51410F01	Holder, Fuse		
■	90	1-D	09T51410F01	Holder, Fuse		
▲	91	2-E	47C64899F53	Shaft		
▲	92	1-F	14A82952F01	Insulator, V−Selector		
▲	93	3-B	14S81482F42	Insulator, Cover		
★	93	3-B	14S81482F42	Insulator, Cover		
■	93	3-B	14S81482F42	Insulator, Cover		
	94	4-A	14S81481F71	Insulator, Cover		

Symbol No.		Index	Part No.	Description		

Notes : ● : For Japanese model only (JA), ■ : For North American model only (UZ),
★ : For Canadian model only (UQ), ▲ : For European model only (AD), Others : Common.

Exploded View (Cabinet)

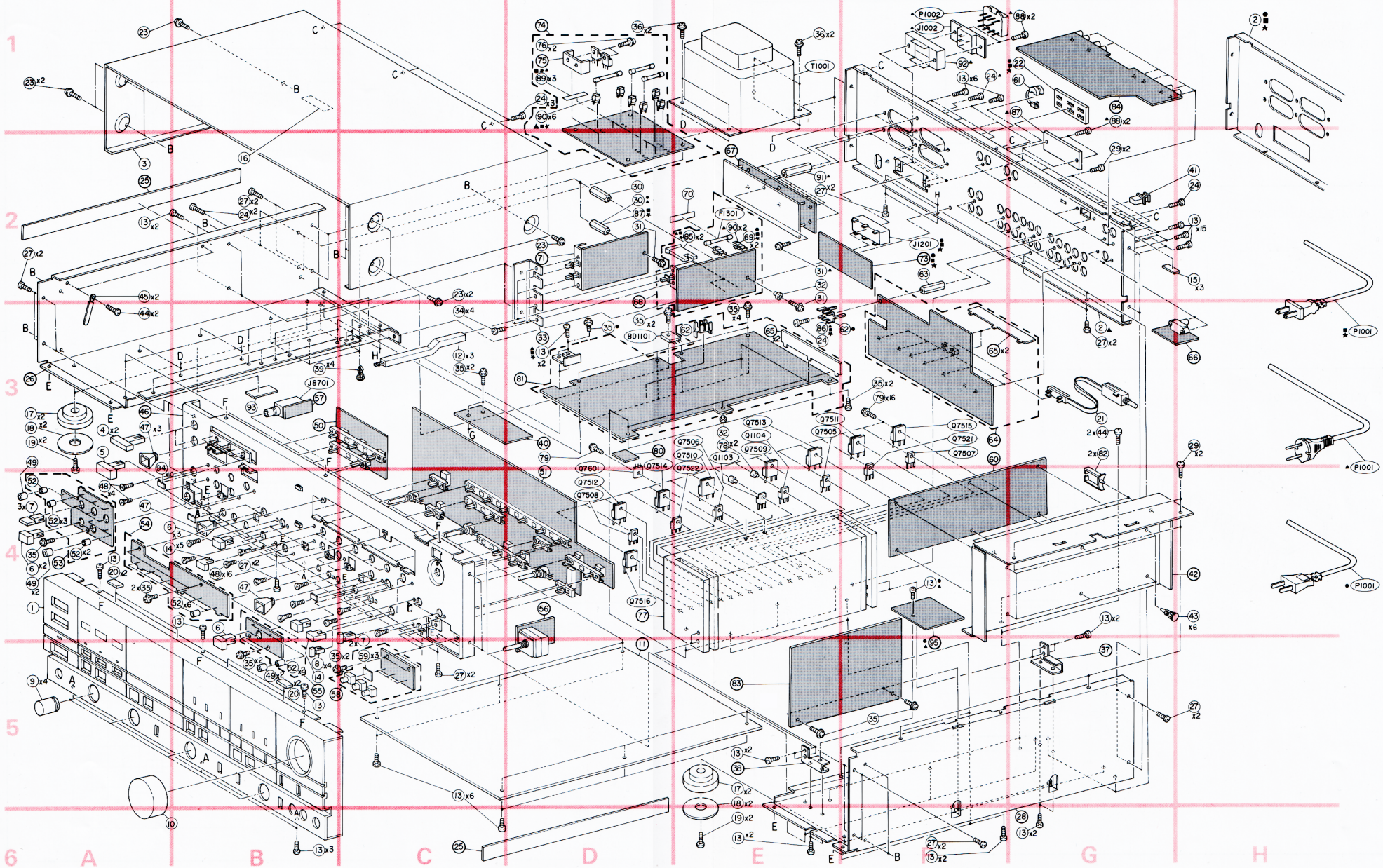

Semi-Conductor Lead Identifications

NJM7805 : IC1501
NJM7809FA : IC1503

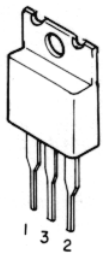

1. INPUT
2. OUTPUT
3. COMMON

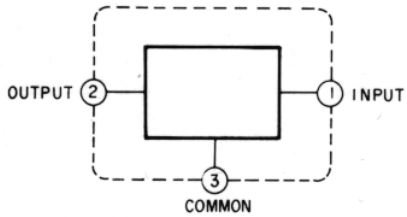

NJM79L05A : IC1502, 2111

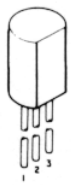

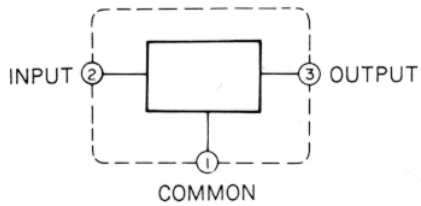

YM3623B : IC2101

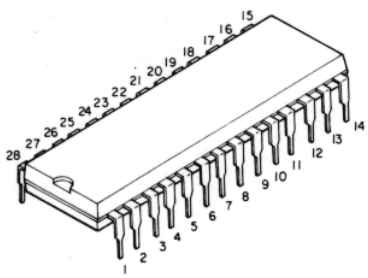

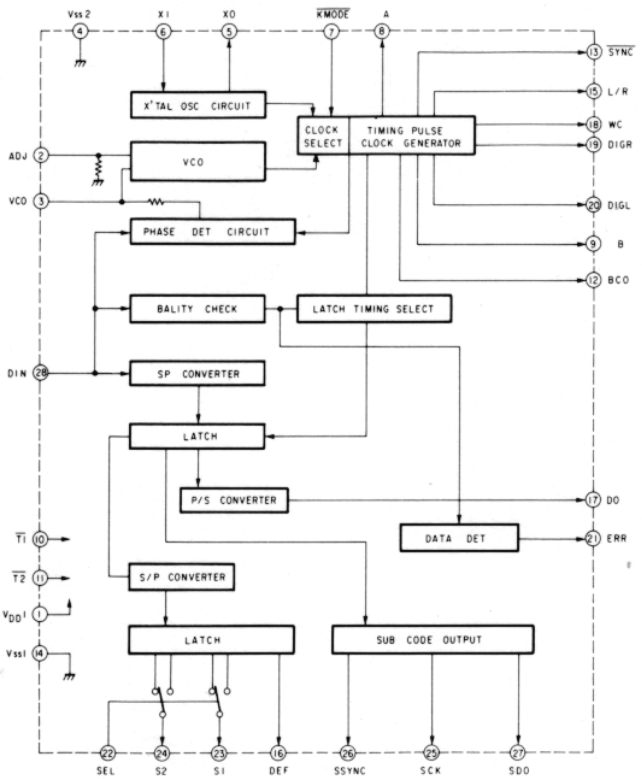

SM5807 : IC2102

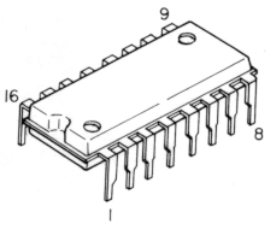

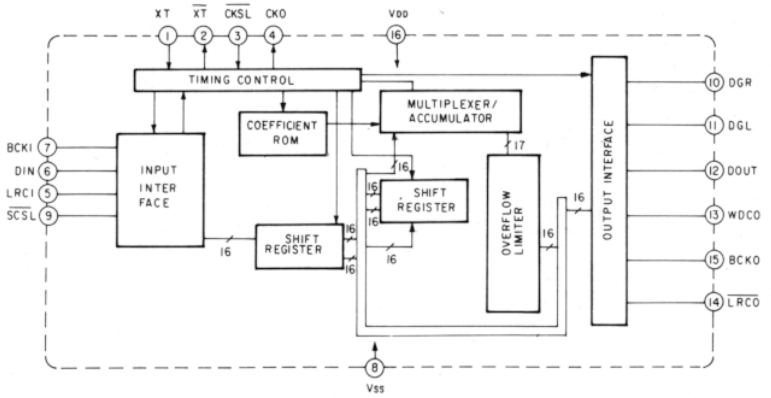

PCM56JP : IC2103

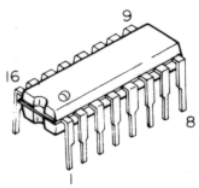

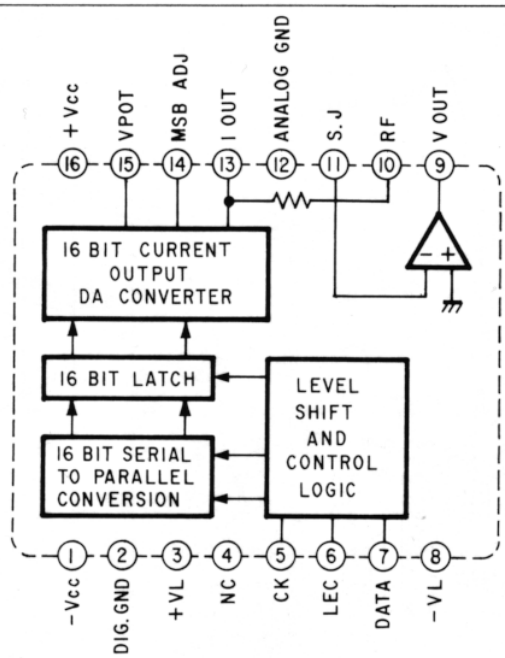

μ PD4053BC : IC2104

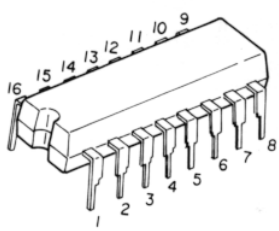

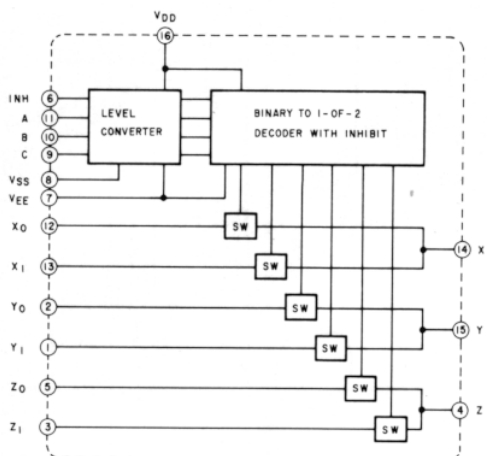

μ PD4052BC : IC2105

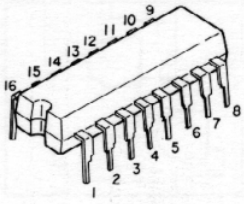

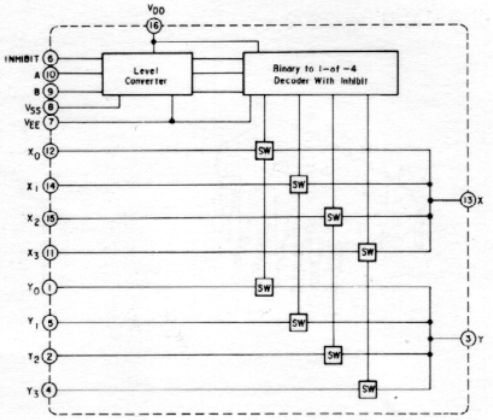

M5238P : IC2106, 2107

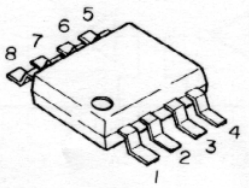

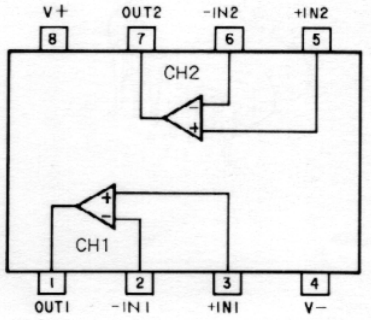

LP22D5B3YS : IC2108, 2109

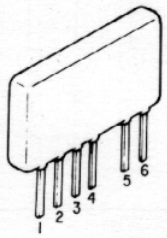

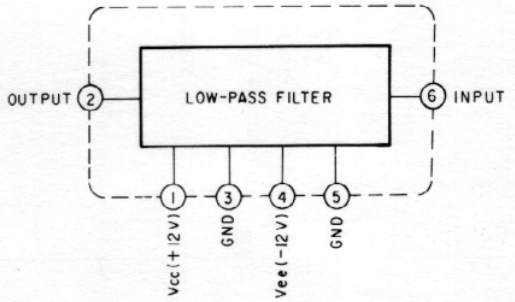

NJM78L05A : IC2110

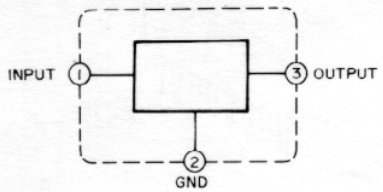

TC74HC00P : IC2112, 2302

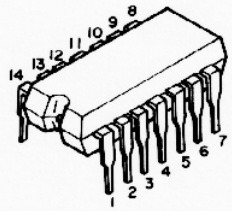

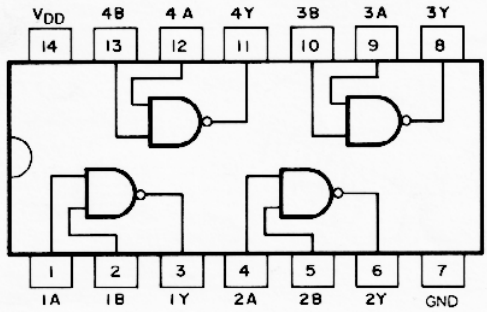

TC74HCU04P : IC2301

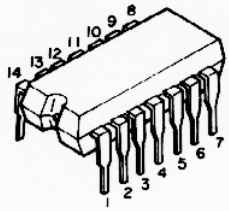

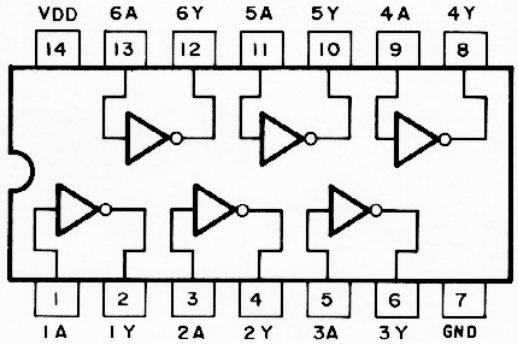

TORX172 : IC2303

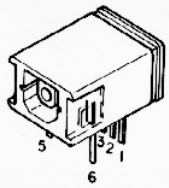

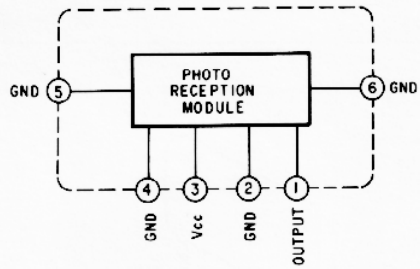

M5238L : IC4101, 4102
: IC9501 (■, ★)

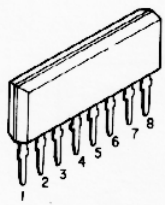

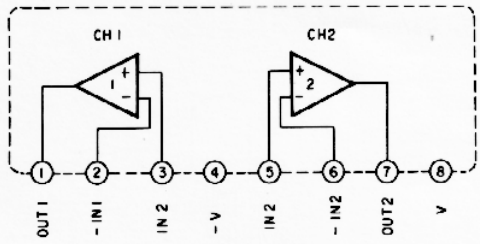

Notes : ● : For Japanese model only (JA), ■ : For North American model only (UZ),
★ : For Canadian model only (UQ), ▲ : For European model only (AD), Others : Common.

μ PC1237H : IC6401

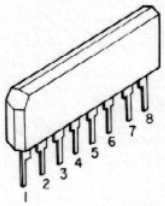

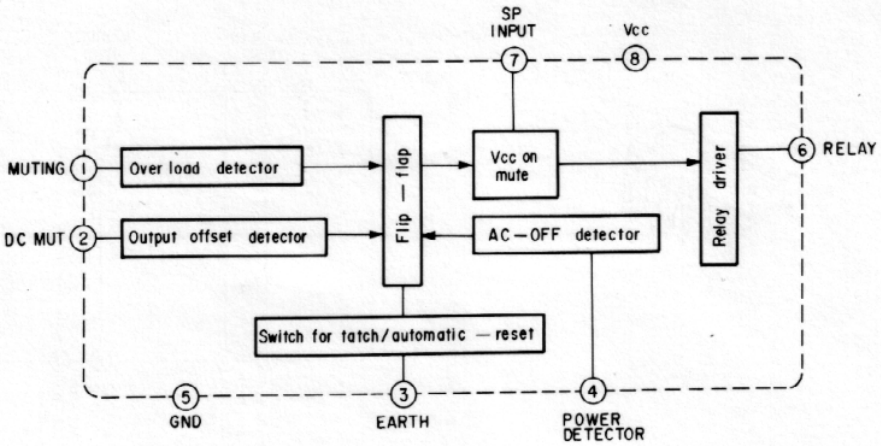

μ PD4069UBC : IC8501

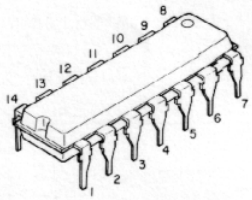

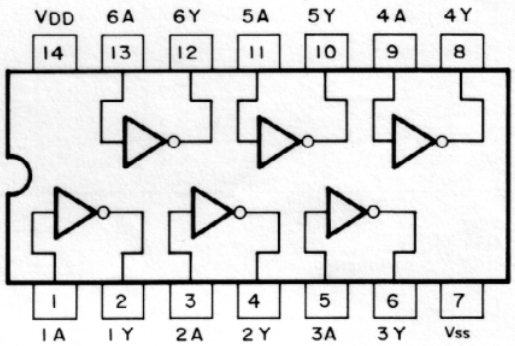

M51321P : IC9101

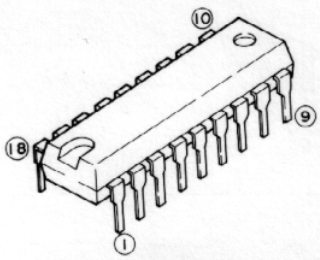

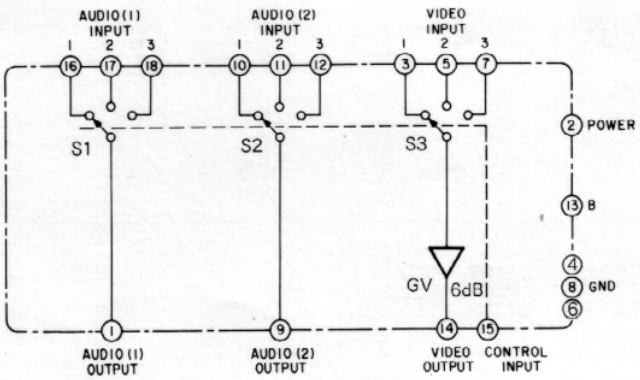

M51320P : IC9102

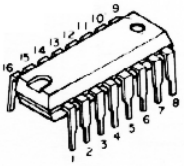

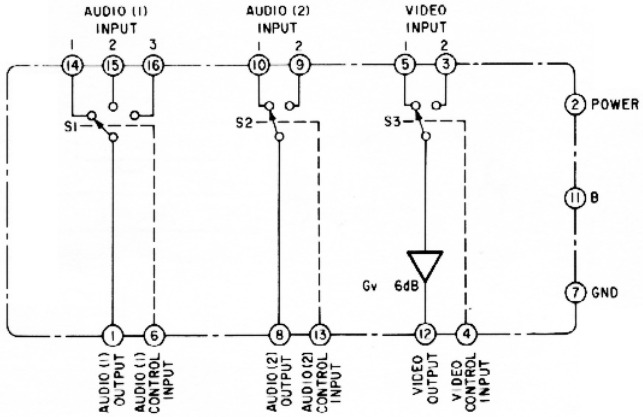

2SK246 : Q1101, 1102, 7121, 7122

1. Source
2. Gate
3. Drain

2SJ77 : Q1104

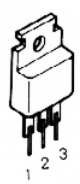

1. Gate
2. Source
3. Drain

2SC2259 : Q1105
2SA979 : Q1106

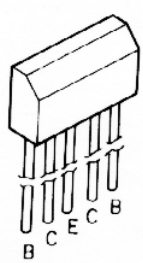

2SC3421 : Q1107, 1109
2SA1358 : Q1108, 1110
2SA1360 : Q7113, 7114, 7123, 7124, 7601
2SA3423 : Q7115, 7116, 7125, 7126
2SC3964 : Q7521, 7522

2SC3332S : Q2101, 2102, 2110, 7523, 7524
2SA1319S : Q2107, 7525, 7526
2SC2240 : Q7517, 7518
2SA970 : Q7519, 7520

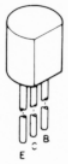

2SC1545 : Q2103, 2104, 2105, 2106, 2108, 2111
: Q9501 (■, ★)

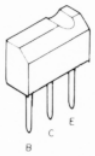

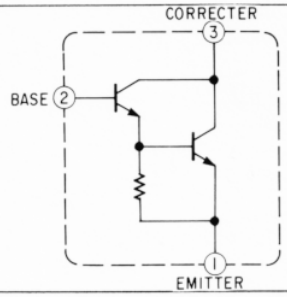

2SC2291 : Q7101, 7102
2SA995 : Q7119, 7120

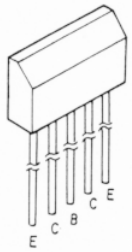

2SK389 : Q7103, 7104, 7117, 7118
2SJ109 : Q7109, 7110

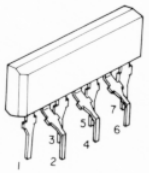

1. Drain 1
2. Gate 1
3. Source 1
4. Sub-straight
5. Source 2
6. Gate 2
7. Drain 2

2SC2910 : Q7107, 7108
2SA1208 : Q7111, 7112, 7127, 7128

2SD1763A : Q7505, 7506
2SB1186A : Q7507, 7508
2SC3298 : Q7701
2SA1306 : Q7702

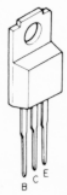

2SD1563A : Q7501 ■, 7502 ■
2SB1086A : Q7503 ■, 7504 ■

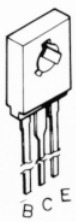

2SC3855 : Q7509, 7510, 7511, 7512
2SA1491 : Q7511, 7512, 7515, 7516

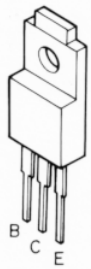

Notes : ◆ : For Japanese model only (JA), ■ : For North American model only,
★ : For Canadian model only (UQ), ▲ : For European model only (AD), Others : Common.

LUX CORPORATION, JAPAN

1-8, 1-Chome, Nishigotanda, Shinagawa-ku, Tokyo 141 Japan
Phone: 03-493-4381 Facsimile: 03-494-8426

68P92549F02

12/87-S Printed in Japan